SL-Z0016 - Special wrench

1614348

https://www.phoenixcontact.com/us/products/1614348

Please be informed that the data shown in this PDF document is generated from our online catalog. Please find the complete data in the user documentation. Our general terms of use for downloads are valid.

Special wrench, series: SL



Commercial data

Item number	1614348
Packing unit	1 pc
Minimum order quantity	1 pc
Note	Made to order (non-returnable)
Sales key	AB38
Product key	ABRFBA
Catalog page	Page 176 (C-2-2019)
GTIN	4046356442039
Weight per piece (including packing)	153.5 g
Weight per piece (excluding packing)	153.5 g
Customs tariff number	82055980
Country of origin	DE

Technical data

Product properties

Product type	Screwdriver tools
Series	SL

Drawings

Dimensional drawing

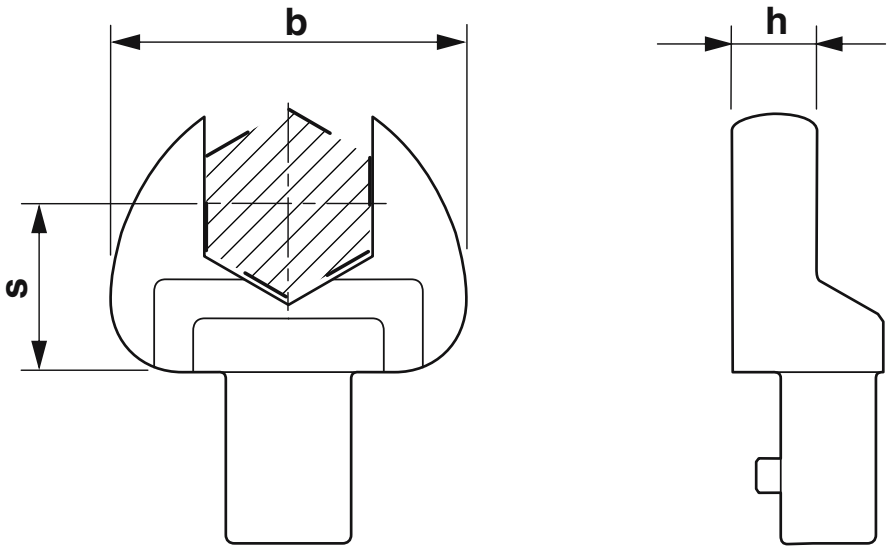

s= 35 mm, b= 79 mm, h= 9 mm

Classifications

ECLASS

ECLASS-11.0	27440312
ECLASS-13.0	27440312
ECLASS-12.0	27440312

ETIM

ETIM 9.0	EC002641

UNSPSC

UNSPSC 21.0	39121400

Environmental product compliance

EU RoHS

Fulfills EU RoHS substance requirements	Not applicable, No electrical and electronic equipment (EEE), cannot be used in EEE

EU REACH SVHC

REACH candidate substance (CAS No.)	No substance above 0.1 wt%

Phoenix Contact 2025 © - all rights reserved
https://www.phoenixcontact.com

Phoenix Contact USA
586 Fulling Mill Road
Middletown, PA 17057, United States
(+717) 944-1300
info@phoenixcon.com