Q-MU PG13,5 - Nut

1670484

https://www.phoenixcontact.com/us/products/1670484

Please be informed that the data shown in this PDF document is generated from our online catalog. Please find the complete data in the user documentation. Our general terms of use for downloads are valid.

Nut (plastic) to lock the contact carrier Pg13.5 / 27 WAF



Commercial data

Item number	1670484
Packing unit	25 pc
Minimum order quantity	25 pc
Sales key	BF50
Product key	AF6ZWX
Catalog page	Page 18 (PC-2002)
GTIN	4017918153212
Weight per piece (including packing)	2.2 g
Weight per piece (excluding packing)	2.2 g
Customs tariff number	39269097
Country of origin	PL

Technical data

Product properties

Product type	Mounting material

Material specifications

Material Housing	Plastic

Drawings

Dimensional drawing

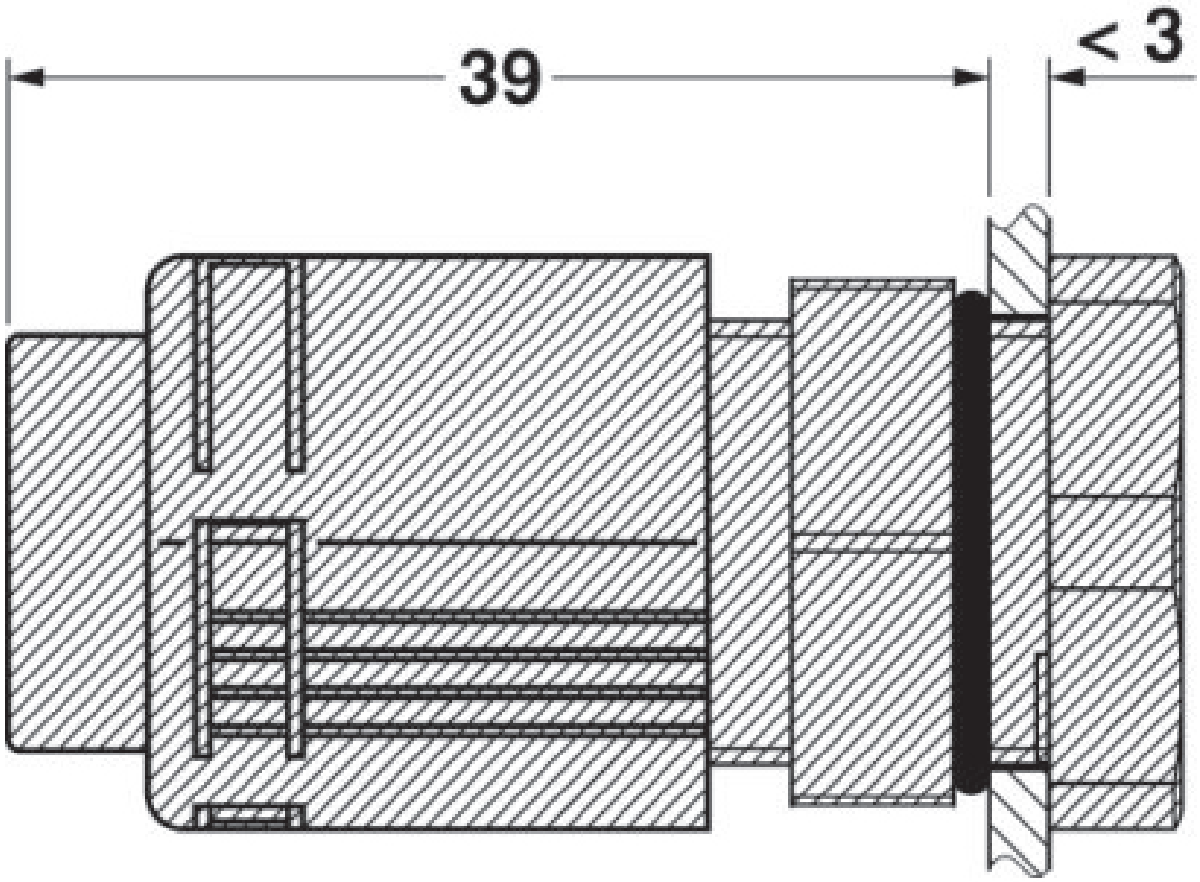

QUICKON panel feed-through with Q-SMU PG 13,5 safety nut, locked with Q-MU PG 13,5 counter nut.

Classifications

ECLASS

ECLASS-11.0	27440691
ECLASS-13.0	27440691
ECLASS-12.0	27440691

ETIM

ETIM 9.0	EC002863

UNSPSC

UNSPSC 21.0	39121400

Environmental product compliance

EU RoHS

Fulfills EU RoHS substance requirements	Yes, No exemptions

China RoHS

Environment friendly use period (EFUP)	EFUP-E
	No hazardous substances above the limits

EU REACH SVHC

REACH candidate substance (CAS No.)	No substance above 0.1 wt%

Phoenix Contact 2025 © - all rights reserved
https://www.phoenixcontact.com

Phoenix Contact USA
586 Fulling Mill Road
Middletown, PA 17057, United States
(+717) 944-1300
info@phoenixcon.com