# MKKDSNH 1,5/ 3-5,08 - PCB terminal block

1731831

https://www.phoenixcontact.com/us/products/1731831

Please be informed that the data shown in this PDF document is generated from our online catalog. Please find the complete data in the user documentation. Our general terms of use for downloads are valid.



PCB terminal block, nominal current: 13.5 A, rated voltage (III/2): 400 V, nominal cross section: 1.5 mm$^2$, number of potentials: 3, number of rows: 1, number of positions per row: 3, product range: MKKDSNH 1,5, pitch: 5.08 mm, connection method: Screw connection with tension sleeve, screw head form: L Slotted, mounting: Wave soldering, conductor/PCB connection direction: 0 °, color: green, Pin layout: Linear pinning, Solder pin [P]: 3.5 mm, number of solder pins per potential: 1, type of packaging: packed in cardboard. The article can be aligned to create different nos. of positions!

## Your advantages

- Well-known connection principle allows worldwide use
- Low temperature rise, thanks to maximum contact force
- Allows connection of two conductors
- Extremely small design for the respective conductor cross section
- Tall type enables conductor connection for sealed PCBs
- The latching on the side enables various numbers of positions to be combined

## Commercial data

| | |
|---|---|
| Item number | 1731831 |
| Packing unit | 50 pc |
| Minimum order quantity | 50 pc |
| Sales key | AA12 |
| Product key | AALFJN |
| Catalog page | Page 93 (C-1-2013) |
| GTIN | 4017918122508 |
| Weight per piece (including packing) | 4.08 g |
| Weight per piece (excluding packing) | 3.575 g |
| Customs tariff number | 85369010 |
| Country of origin | CN |

# Technical data

## Product properties

| | |
|---|---|
| Product type | Printed circuit board terminal |
| Product family | MKKDSNH 1,5 |
| Product line | COMBICON Terminals S |
| Type | PC terminal block can be aligned |
| Number of positions | 3 |
| Pitch | 5.08 mm |
| Number of connections | 3 |
| Number of rows | 1 |
| Number of potentials | 3 |
| Pin layout | Linear pinning |
| Solder pins per potential | 1 |

Data management status

| | |
|---|---|
| Article revision | 05 |

## Electrical properties

| | |
|---|---|
| Nominal current $I_N$ | 13.5 A |
| Nominal voltage $U_N$ | 400 V |
| Rated voltage (III/3) | 250 V |
| Rated surge voltage (III/3) | 4 kV |
| Rated voltage (III/2) | 400 V |
| Rated surge voltage (III/2) | 4 kV |
| Rated voltage (II/2) | 630 V |
| Rated surge voltage (II/2) | 4 kV |

## Connection data

Connection technology

| | |
|---|---|
| Type | PC terminal block can be aligned |
| Nominal cross section | 1.5 mm² |

Conductor connection

| | |
|---|---|
| Connection method | Screw connection with tension sleeve |
| Conductor cross section rigid | 0.14 mm² ... 1.5 mm² |
| Conductor cross section flexible | 0.14 mm² ... 1.5 mm² |
| Conductor cross section AWG | 26 ... 16 |
| Conductor cross section flexible, with ferrule without plastic sleeve | 0.25 mm² ... 1 mm² |
| Conductor cross section, flexible, with ferrule, with plastic sleeve | 0.25 mm² ... 1.5 mm² |
| 2 conductors with same cross section, solid | 0.14 mm² ... 0.75 mm² |
| 2 conductors with same cross section, flexible | 0.14 mm² ... 0.75 mm² |
| 2 conductors with same cross section, flexible, with ferrule | 0.25 mm² ... 0.5 mm² |

| | |
|---|---|
| without plastic sleeve | |
| 2 conductors with the same cross section, flexible, with TWIN ferrule with plastic sleeve | 0.5 mm² ... 1 mm² (1st level: 0.5 mm² ... 1 mm² / 2nd level: 0.5 mm²) |
| Stripping length | 6 mm |
| Drive form screw head | Slotted (L) |
| Tightening torque | 0.5 Nm ... 0.6 Nm |

## Mounting

| | |
|---|---|
| Mounting type | Wave soldering |
| Pin layout | Linear pinning |

## Material specifications

Material data - contact

| | |
|---|---|
| Note | WEEE/RoHS-compliant, free of whiskers according to IEC 60068-2-82/JEDEC JESD 201 |
| Contact material | Cu alloy |
| Surface characteristics | Tin-plated |
| Metal surface terminal point (top layer) | Tin (5 - 7 µm Sn) |
| Metal surface terminal point (middle layer) | Nickel (2 - 3 µm Ni) |
| Metal surface soldering area (top layer) | Tin (5 - 7 µm Sn) |
| Metal surface soldering area (middle layer) | Nickel (2 - 3 µm Ni) |

Material data - housing

| | |
|---|---|
| Color (Housing) | green (6021) |
| Insulating material | PA |
| Insulating material group | I |
| CTI according to IEC 60112 | 600 |
| Flammability rating according to UL 94 | V0 |
| Glow wire flammability index GWFI according to EN 60695-2-12 | 850 |
| Glow wire ignition temperature GWIT according to EN 60695-2-13 | 775 |
| Temperature for the ball pressure test according to EN 60695-10-2 | 125 °C |

## Dimensions

| | |
|---|---|
| Dimensional drawing | 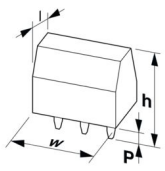 |
| Pitch | 5.08 mm |
| Width [w] | 15.24 mm |
| Height [h] | 22.6 mm |
| Length [l] | 8.6 mm |
| Installed height | 19.1 mm |

| | |
|---|---|
| Solder pin length [P] | 3.5 mm |
| Pin dimensions | 0.5 x 1 mm |

PCB design

| | |
|---|---|
| Hole diameter | 1.3 mm |

## Mechanical tests

Test for conductor damage and slackening

| | |
|---|---|
| Specification | IEC 60998-2-1:2002-12 |
| Result | Test passed |

Pull-out test

| | |
|---|---|
| Specification | IEC 60998-2-1:2002-12 |
| Conductor cross section/conductor type/tractive force setpoint/actual value | 0.14 mm² / solid / > 10 N |
| | 0.14 mm² / flexible / > 10 N |
| | 1.5 mm² / solid / > 40 N |
| | 1.5 mm² / flexible / > 40 N |

Torque test

| | |
|---|---|
| Specification | IEC 60998-2-1:2002-12 |

## Electrical tests

Temperature-rise test

| | |
|---|---|
| Specification | IEC 60998-1:2002-12 |
| Requirement temperature-rise test | Increase in temperature ≤ 45 K |

Insulation resistance

| | |
|---|---|
| Specification | IEC 60998-1:2002-12 |
| Insulation resistance, neighboring positions | $10^9$ Ω |

Air clearances and creepage distances |

| | |
|---|---|
| Specification | IEC 60664-1:2007-04 |
| Insulating material group | I |
| Comparative tracking index (IEC 60112) | CTI 600 |
| Rated insulation voltage (III/3) | 250 V |
| Rated surge voltage (III/3) | 4 kV |
| minimum clearance value - non-homogenous field (III/3) | 3 mm |
| minimum creepage distance (III/3) | 3.2 mm |
| Note on connection cross section | With connected conductor 1.5 mm² (solid). |
| Rated insulation voltage (III/2) | 400 V |
| Rated surge voltage (III/2) | 4 kV |
| minimum clearance value - non-homogenous field (III/2) | 3 mm |
| minimum creepage distance (III/2) | 3 mm |
| Rated insulation voltage (II/2) | 630 V |
| Rated surge voltage (II/2) | 4 kV |

| | |
|---|---|
| minimum clearance value - non-homogenous field (II/2) | 3 mm |
| minimum creepage distance (II/2) | 3.2 mm |

## Environmental and real-life conditions

Vibration test

| | |
|---|---|
| Specification | IEC 60068-2-6:1995-03 |
| Frequency | 10 - 150 - 10 Hz |
| Sweep speed | 1 octave/min |
| Amplitude | 0.35 mm (10 Hz ... 60.1 Hz) |
| Acceleration | 5g (60.1 Hz ... 150 Hz) |
| Test duration per axis | 2.5 h |
| Test directions | X-, Y- and Z-axis |

Glow-wire test

| | |
|---|---|
| Specification | IEC 60998-1:2002-12 |
| Temperature | 850 °C |
| Time of exposure | 5 s |

Ambient conditions

| | |
|---|---|
| Ambient temperature (operation) | -40 °C ... 100 °C (Depending on the current carrying capacity/derating curve) |
| Ambient temperature (storage/transport) | -40 °C ... 70 °C |
| Relative humidity (storage/transport) | 30 % ... 70 % |
| Ambient temperature (assembly) | -5 °C ... 100 °C |

## Packaging specifications

| | |
|---|---|
| Type of packaging | packed in cardboard |

## Drawings

Diagram

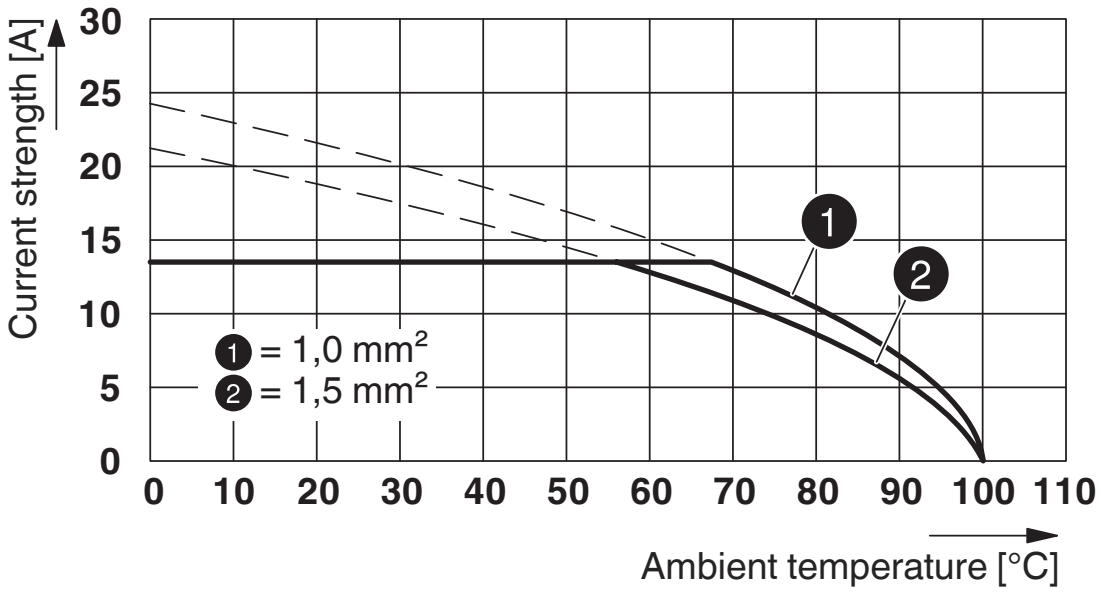


Type: MKKDSNH 1,5/...-5,08
Tested according to DIN EN 60512-5-2:2003-01
Reduction factor = 1
Number of positions: 5

Drilling plan/solder pad geometry

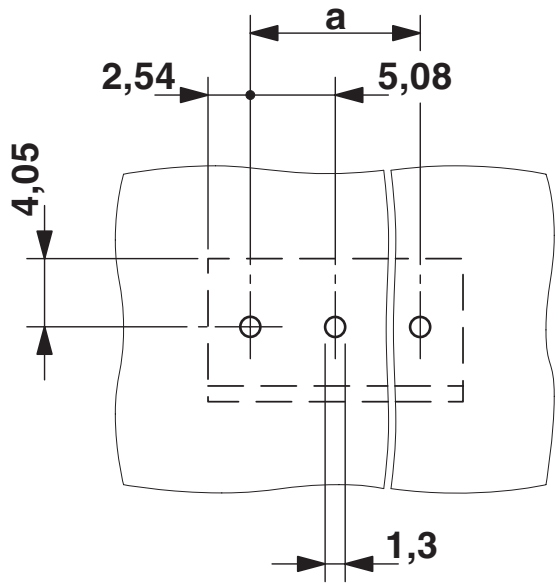

Dimensional drawing

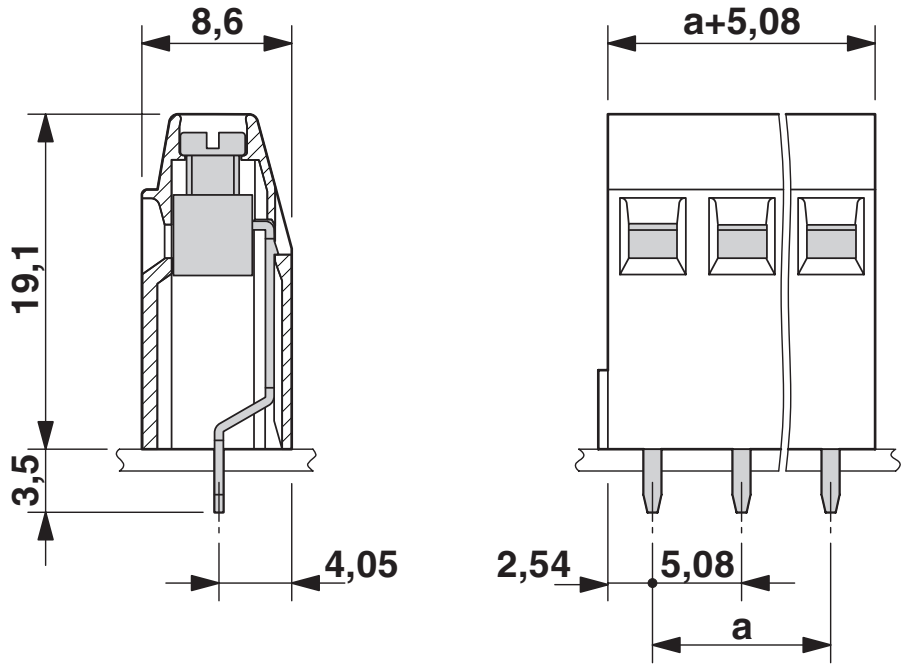

## Approvals

To download certificates, visit the product detail page: https://www.phoenixcontact.com/us/products/1731831

**cULus Recognized**
Approval ID: E60425-19770427

| | Nominal voltage $U_N$ | Nominal current $I_N$ | Cross section AWG | Cross section $mm^2$ |
|---|---|---|---|---|
| Use group B | | | | |
| Screw connection | 300 V | 10 A | 30 - 14 | - |
| 2 conductors with the same cross-section | 300 V | 10 A | 2X - 18 | - |
| Use group D | | | | |
| Screw connection | 300 V | 10 A | 30 - 14 | - |
| 2 conductors with the same cross-section | 300 V | 10 A | 2X - 18 | - |

## Classifications

### ECLASS

| | |
|---|---|
| ECLASS-11.0 | 27460101 |
| ECLASS-12.0 | 27460101 |
| ECLASS-13.0 | 27460101 |

### ETIM

| | |
|---|---|
| ETIM 9.0 | EC002643 |

### UNSPSC

| | |
|---|---|
| UNSPSC 21.0 | 39121400 |

## Environmental product compliance

EU RoHS

| | |
|---|---|
| Fulfills EU RoHS substance requirements | Yes, No exemptions |

China RoHS

| | |
|---|---|
| Environment friendly use period (EFUP) | EFUP-E |
| | No hazardous substances above the limits |

EU REACH SVHC

| | |
|---|---|
| REACH candidate substance (CAS No.) | No substance above 0.1 wt% |

## Accessories

Note: Applying some accessories below might limit this product.

### EBP 2- 5 - Insertion bridge

1733169

https://www.phoenixcontact.com/us/products/1733169

Insertion bridge for connectors with 5.0 mm or 5.08 mm pitch



Max. current carrying capacity: 12 A

### EBP 3- 5 - Insertion bridge

1733172

https://www.phoenixcontact.com/us/products/1733172

Insertion bridge for connectors with 5.0 mm or 5.08 mm pitch



Max. current carrying capacity: 12 A

## SZS 0,6X3,5 - Screwdriver

1205053

https://www.phoenixcontact.com/us/products/1205053



Actuation tool, for ST terminal blocks, insulated, also suitable for use as a bladed screwdriver, size: 0.6 x 3.5 x 100 mm, 2-component grip, with non-slip grip

## SK 5,08/3,8:FORTL.ZAHLEN - Marker card

0804293

https://www.phoenixcontact.com/us/products/0804293

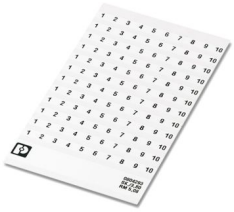

Marker card, white, labeled, horizontal: consecutive numbers 1 ... 10, 11 ... 20, etc. up to 91 ... (99)100, mounting type: adhesive, for terminal block width: 5.08 mm, lettering field size: 5.08 x 3.8 mm

## SK  5,08/3,8:UNBEDRUCKT - Marker card

0805412

https://www.phoenixcontact.com/us/products/0805412



Marker card, Sheet, white, unlabeled, can be labeled with: Marker pen: without print, mounting type: adhesive, for terminal block width: 5.08 mm, lettering field size: 5.08 x 3.8 mm, Number of individual labels: 120


Phoenix Contact 2024 © - all rights reserved
https://www.phoenixcontact.com



Phoenix Contact USA
586 Fulling Mill Road
Middletown, PA 17057, United States
(+717) 944-1300
info@phoenixcon.com