SMKDSP 1,5/ 4-5,08 - PCB terminal block

1733596

https://www.phoenixcontact.com/us/products/1733596

Please be informed that the data shown in this PDF document is generated from our online catalog. Please find the complete data in the user documentation. Our general terms of use for downloads are valid.

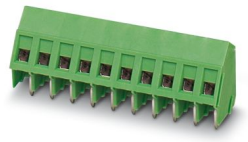

PCB terminal block, nominal current: 17.5 A, rated voltage (III/2): 400 V, nominal cross section: 1.5 mm^2, number of potentials: 4, number of rows: 1, number of positions per row: 4, product range: SMKDSP 1,5, pitch: 5.08 mm, connection method: Screw connection with tension sleeve, screw head form: L Slotted, mounting: Wave soldering, conductor/PCB connection direction: 55 °, color: green, Pin layout: Linear pinning, Solder pin [P]: 3.5 mm, number of solder pins per potential: 1, type of packaging: packed in cardboard. The article can be aligned to create different nos. of positions!

Your advantages

- Well-known connection principle allows worldwide use
- Low temperature rise, thanks to maximum contact force
- Allows connection of two conductors
- Angled connection enables multi-row arrangement on the PCB
- Quick and convenient testing using integrated test option
- The latching on the side enables various numbers of positions to be combined

Commercial data

Item number	1733596
Packing unit	250 pc
Minimum order quantity	250 pc
Sales key	AA12
Product key	AALFGS
Catalog page	Page 95 (C-1-2013)
GTIN	4017918026684
Weight per piece (including packing)	6.02 g
Weight per piece (excluding packing)	5.998 g
Customs tariff number	85369010
Country of origin	DE

Technical data

Product properties

Product type	Printed circuit board terminal
Product family	SMKDSP 1,5
Product line	COMBICON Terminals S
Type	PC termination block
Number of positions	4
Pitch	5.08 mm
Number of connections	4
Number of rows	1
Number of potentials	4
Pin layout	Linear pinning
Solder pins per potential	1

Data management status

Article revision	03

Electrical properties

Nominal current I_N	17.5 A
Nominal voltage U_N	400 V
Rated voltage (III/3)	250 V
Rated surge voltage (III/3)	4 kV
Rated voltage (III/2)	400 V
Rated surge voltage (III/2)	4 kV
Rated voltage (II/2)	630 V
Rated surge voltage (II/2)	4 kV

Connection data

Connection technology

Type	PC termination block
Nominal cross section	1.5 mm²

Conductor connection

Connection method	Screw connection with tension sleeve
Conductor cross section rigid	0.14 mm² ... 2.5 mm²
Conductor cross section flexible	0.14 mm² ... 1.5 mm²
Conductor cross section AWG	26 ... 14
Conductor cross section flexible, with ferrule without plastic sleeve	0.25 mm² ... 1.5 mm²
Conductor cross section, flexible, with ferrule, with plastic sleeve	0.25 mm² ... 1.5 mm²
2 conductors with same cross section, solid	0.14 mm² ... 1 mm²
2 conductors with same cross section, flexible	0.14 mm² ... 0.75 mm²
2 conductors with same cross section, flexible, with ferrule	0.25 mm² ... 0.5 mm²

without plastic sleeve	
2 conductors with the same cross section, flexible, with TWIN ferrule with plastic sleeve	0.5 mm² ... 1 mm²
Stripping length	7 mm
Drive form screw head	Slotted (L)
Tightening torque	0.5 Nm ... 0.6 Nm

Mounting

Mounting type	Wave soldering
Pin layout	Linear pinning

Material specifications

Material data - contact

Note	WEEE/RoHS-compliant, free of whiskers according to IEC 60068-2-82/JEDEC JESD 201
Contact material	Cu alloy
Surface characteristics	Tin-plated
Metal surface terminal point (top layer)	Tin (5 - 7 µm Sn)
Metal surface terminal point (middle layer)	Nickel (2 - 3 µm Ni)
Metal surface soldering area (top layer)	Tin (5 - 7 µm Sn)
Metal surface soldering area (middle layer)	Nickel (2 - 3 µm Ni)

Material data - housing

Color (Housing)	green (6021)
Insulating material	PA
Insulating material group	I
CTI according to IEC 60112	600
Flammability rating according to UL 94	V0
Glow wire flammability index GWFI according to EN 60695-2-12	850
Glow wire ignition temperature GWIT according to EN 60695-2-13	775
Temperature for the ball pressure test according to EN 60695-10-2	125 °C

Notes

Note on application	For safe conductor connection, always adhere to a defined tightening torque. Particularly in the case of PCB terminal blocks with two or three positions, the individual solder pin for each contact point cannot compensate for this. That is why the terminal blocks must be supported during conductor connection (held with one hand, support on the housing).

Dimensions

Dimensional drawing	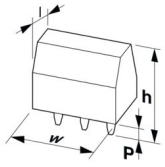
Pitch	5.08 mm
Width [w]	20.32 mm
Height [h]	18.8 mm
Length [l]	13.4 mm
Installed height	15.3 mm
Solder pin length [P]	3.5 mm
Pin dimensions	0.9 x 0.9 mm

PCB design

Hole diameter	1.3 mm

Mechanical tests

Test for conductor damage and slackening

Specification	IEC 60999-1:1999-11
Result	Test passed

Pull-out test

Specification	IEC 60999-1:1999-11
Conductor cross section/conductor type/tractive force setpoint/actual value	0.14 mm² / solid / > 10 N
	0.14 mm² / flexible / > 10 N
	2.5 mm² / solid / > 50 N
	1.5 mm² / flexible / > 40 N

Electrical tests

Temperature-rise test

Specification	IEC 60947-7-4:2019-01
Requirement temperature-rise test	The sum of ambient temperature and temperature rise of the PCB terminal block shall not exceed the upper limiting temperature.

Short-time withstand current

Specification	IEC 60947-7-4:2019-01

Insulation resistance

Specification	IEC 60512-3-1:2002-02
Insulation resistance, neighboring positions	> 5 MΩ

Air clearances and creepage distances |

Specification	IEC 60947-7-4:2019-01
Insulating material group	I

Comparative tracking index (IEC 60112)	CTI 600
Rated insulation voltage (III/3)	250 V
Rated surge voltage (III/3)	4 kV
minimum clearance value - non-homogenous field (III/3)	3 mm
minimum creepage distance (III/3)	3.2 mm
Rated insulation voltage (III/2)	400 V
Rated surge voltage (III/2)	4 kV
minimum clearance value - non-homogenous field (III/2)	3 mm
minimum creepage distance (III/2)	3 mm
Rated insulation voltage (II/2)	630 V
Rated surge voltage (II/2)	4 kV
minimum clearance value - non-homogenous field (II/2)	3 mm
minimum creepage distance (II/2)	3.2 mm

Environmental and real-life conditions

Vibration test

Specification	IEC 60068-2-6:2007-12
Frequency	10 - 150 - 10 Hz
Sweep speed	1 octave/min
Amplitude	0.35 mm (10 Hz ... 60.1 Hz)
Acceleration	5g (60.1 Hz ... 150 Hz)
Test duration per axis	2.5 h
Test directions	X-, Y- and Z-axis

Glow-wire test

Specification	IEC 60695-2-10:2013-04
Temperature	850 °C
Time of exposure	5 s

Aging

Specification	IEC 60947-7-4:2019-01

Ambient conditions

Ambient temperature (operation)	-40 °C ... 105 °C (Depending on the current carrying capacity/derating curve)
Ambient temperature (storage/transport)	-40 °C ... 70 °C
Relative humidity (storage/transport)	30 % ... 70 %
Ambient temperature (assembly)	-5 °C ... 100 °C

Packaging specifications

Type of packaging	packed in cardboard

Drawings

Diagram

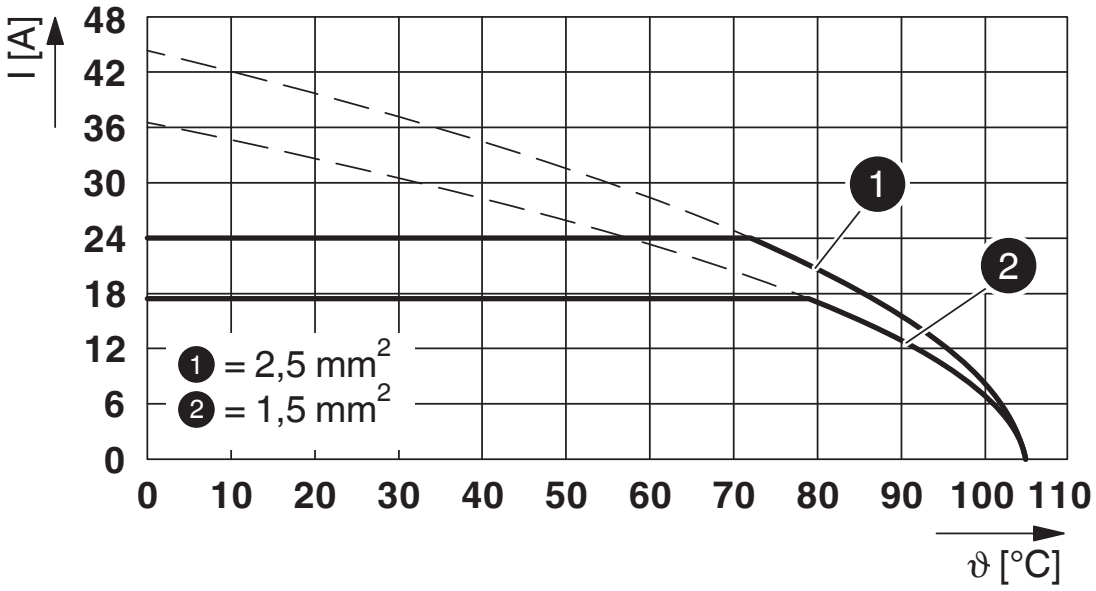

Type: SMKDSP 1,5/...-5,08

Drilling plan/solder pad geometry

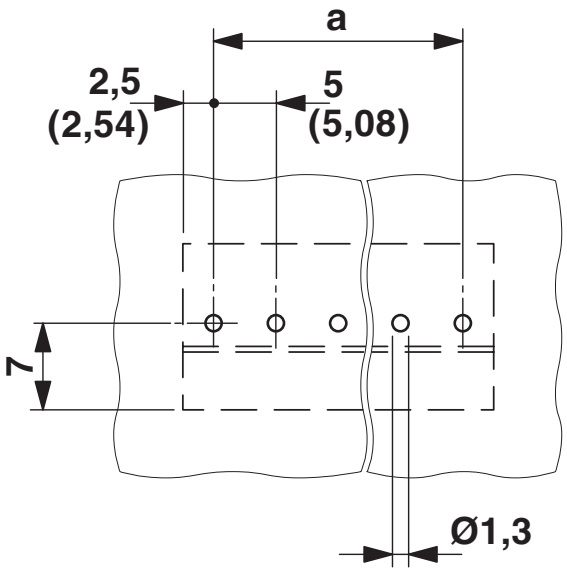

Dimensional drawing

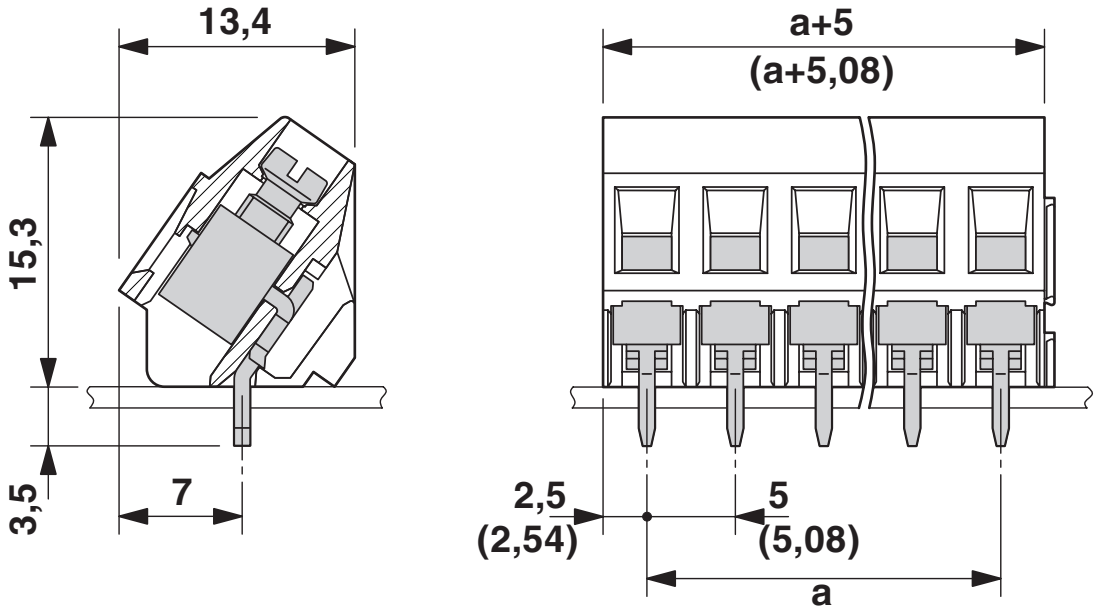

Approvals

To download certificates, visit the product detail page: https://www.phoenixcontact.com/us/products/1733596

CSA
Approval ID: 13631

	Nominal voltage U_N	Nominal current I_N	Cross section AWG	Cross section mm^2
Use group B				
	300 V	10 A	28 - 14	-
Use group D				
	300 V	10 A	28 - 14	-

cULus Recognized
Approval ID: E60425-19870331

	Nominal voltage U_N	Nominal current I_N	Cross section AWG	Cross section mm^2
Use group B				
	250 V	15 A	30 - 14	-
Use group D				
	300 V	10 A	30 - 14	-

VDE Zeichengenehmigung
Approval ID: 40055535

	Nominal voltage U_N	Nominal current I_N	Cross section AWG	Cross section mm^2
	400 V	22 A	-	0.2 - 2.5

Classifications

ECLASS

ECLASS-11.0	27460101
ECLASS-12.0	27460101
ECLASS-13.0	27460101

ETIM

ETIM 9.0	EC002643

UNSPSC

UNSPSC 21.0	39121400

Environmental product compliance

EU RoHS

Fulfills EU RoHS substance requirements	Yes, No exemptions

China RoHS

Environment friendly use period (EFUP)	EFUP-E
	No hazardous substances above the limits

EU REACH SVHC

REACH candidate substance (CAS No.)	No substance above 0.1 wt%

Accessories

SZS 0,6X3,5 - Screwdriver

1205053

https://www.phoenixcontact.com/us/products/1205053



Actuation tool, for ST terminal blocks, insulated, also suitable for use as a bladed screwdriver, size: 0.6 x 3.5 x 100 mm, 2-component grip, with non-slip grip

SK 5,08/3,8:FORTL.ZAHLEN - Marker card

0804293

https://www.phoenixcontact.com/us/products/0804293

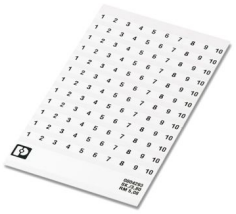

Marker card, white, labeled, horizontal: consecutive numbers 1 ... 10, 11 ... 20, etc. up to 91 ... (99)100, mounting type: adhesive, for terminal block width: 5.08 mm, lettering field size: 5.08 x 3.8 mm

MPS-MT - Test plug

0201744

https://www.phoenixcontact.com/us/products/0201744



Test plug, with solder connection up to 1 mm^2 conductor cross section, number of positions: 1, color: gray

RPS - Reducing plug

0201647

https://www.phoenixcontact.com/us/products/0201647



Reducing plug, number of positions: 1, color: gray

Phoenix Contact 2024 © - all rights reserved
https://www.phoenixcontact.com

Phoenix Contact USA
586 Fulling Mill Road
Middletown, PA 17057, United States
(+717) 944-1300
info@phoenixcon.com