D-LAN-19"-8 - Surge protection device

2880163

https://www.phoenixcontact.com/us/products/2880163

Please be informed that the data shown in this PDF document is generated from our online catalog. Please find the complete data in the user documentation. Our general terms of use for downloads are valid.

19" rack with 8 surge protected ports for data interfaces in Ethernet (1000Base-T), Token Ring and FDDI/CDDI networks in acc. with Class D/EN 50173 (CAT5e), connection on the protective device: RJ45 sockets



Your advantages

- Space saving with low installed height (1RU)
- Easy network integration via RJ45 jacks
- Can be used in applications up to 1 Gbps with adapted protective circuit
- Easy to extend with the modular design

Commercial data

Item number	2880163
Packing unit	1 pc
Minimum order quantity	1 pc
Note	Made to order (non-returnable)
Sales key	CL24
Product key	CL3111
Catalog page	Page 167 (C-4-2019)
GTIN	4017918962814
Weight per piece (including packing)	3,120 g
Weight per piece (excluding packing)	3,119.577 g
Customs tariff number	85363010
Country of origin	DE

Technical data

Product properties

Product type	Surge protection for information technology
Product family	DATATRAB
IEC test classification	C1
	C2
	C3
	B3
Type	19" rack patch module
Number of positions	8
Surge protection fault message	none

Insulation characteristics

Overvoltage category	II
Pollution degree	2

Connection data

Connection method	RJ45

Dimensions

Dimensional drawing	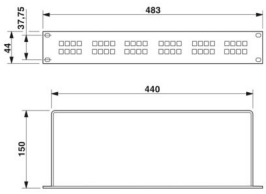
Width	483 mm
Height	44 mm
Rack unit	1 U
Depth	160 mm

Material specifications

Color	Steel/stainless steel color
Housing material	Sheet steel

Mechanical properties

Mechanical data

Open side panel	No

Protective circuit

Direction of action	Line-Line & Line-Signal Ground/Shield & Signal Ground/Shield-Earth Ground

Maximum continuous voltage U_C (line-line)	6 V DC
Maximum continuous voltage U_C (line-earth)	68 V DC (optional: ±6 V DC)
Rated current	1.5 A (25 °C)
Operating effective current I_C at U_C	≤ 1 mA
Residual current I_{PE}	≤ 1 mA (jumper 2 unplugged)
Nominal discharge current I_n (8/20) µs (line-line)	350 A
Nominal discharge current I_n (8/20) µs (line-ground)	350 A
Nominal discharge current I_n (8/20) µs (shield-ground)	2.5 kA (with insulated housing)
Total discharge current I_{total} (8/20) µs	10 kA
Nominal pulse current Ian (10/1000) µs (line-line)	100 A
Nominal pulse current Ian (10/1000) µs (line-earth)	100 A
Output voltage limitation at 1 kV/µs (line-line) static	≤ 20 V
Output voltage limitation at 1 kV/µs (line-earth) static	≤ 30 V (J2 plugged)
	≤ 170 V (J2 unplugged)
Output voltage limitation at 1 kV/µs(shield-ground) static	≤ 700 V (with insulated shield)
Residual voltage at I_n (conductor-conductor)	≤ 65 V
Residual voltage at I_n (conductor-ground)	≤ 45 V (J2 ON)
	≤ 220 V (J2 OFF)
Residual voltage at I_n (shield-ground)	≤ 700 V
Voltage protection level U_p (line-line)	≤ 50 V (C1 - 500 V / 250 A)
Voltage protection level U_p (line-earth)	≤ 40 V (C1 - 500 V / 250 A (J2 ON))
	≤ 180 V (C1 - 500 V / 250 A (J2 OFF))
Voltage protection level U_p (shield-ground)	≤ 800 V (with insulated housing)
Response time t_A (line-line)	≤ 1 ns
Response time t_A (line-earth)	≤ 1 ns
Response time tA (line-shield)	≤ 100 ns
Input attenuation aE, sym.	typ. 1 dB (≤ 100 MHz)
Near-end crosstalk attenuation	typ. 36 dB (100 Ω system / 100 MHz)
Cut-off frequency fg (3 dB), sym. in 100 Ω system	> 100 MHz
Capacity (Core-Core)	typ. 20 pF
Capacity (Core-Earth)	typ. 1 pF
Surge protection fault message	none
Impulse durability (line-line)	C1 - 500 V / 250 A
Impulse durability (line-earth)	C1 - 500 V / 250 A
Impulse durability (shield-ground)	C2 - 4 kV/2 kA

Environmental and real-life conditions

Ambient conditions

Degree of protection	IP20
Ambient temperature (operation)	-40 °C ... 80 °C

Standards and regulations

Air clearances and creepage distances

Standards/regulations	DIN VDE 0110-1 / IEC 60664-1

Standards Information technology specification

Standards/regulations	IEC 61643-21
	DIN EN 50173-1
	IEC 61643-21
	DIN EN 50173-1
Standards/specifications	IEC 61643-21
Note	2000

Mounting

Mounting type	19" rack

Drawings

Dimensional drawing

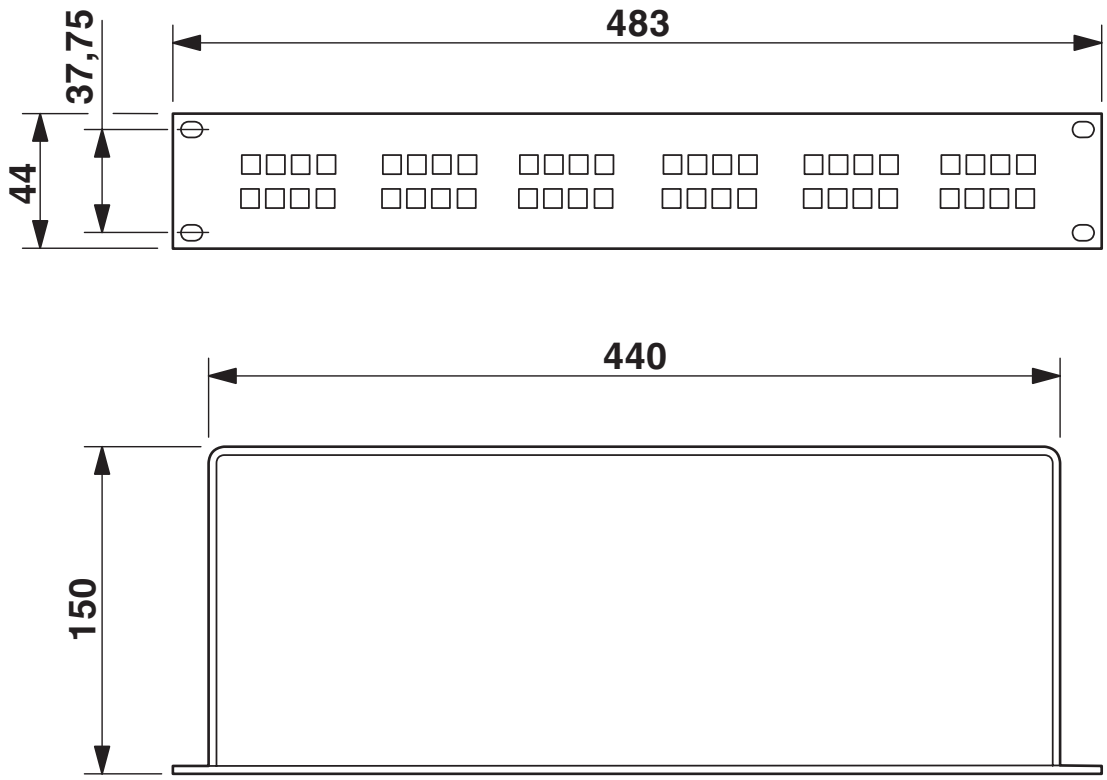

Circuit diagram

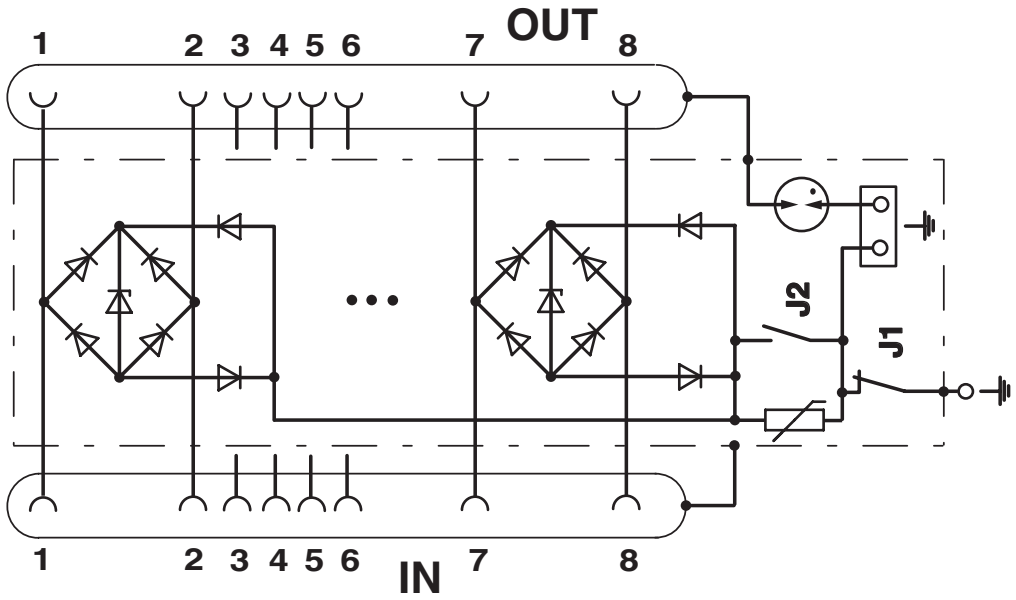

Approvals

To download certificates, visit the product detail page: https://www.phoenixcontact.com/us/products/2880163

EAC
Approval ID: RU C-DE.*09.B.00169

Classifications

ECLASS

ECLASS-11.0	27130807
ECLASS-13.0	27171503

ETIM

ETIM 9.0	EC000943

UNSPSC

UNSPSC 21.0	39121600

Environmental product compliance

EU RoHS

Fulfills EU RoHS substance requirements	Yes
Exemption	6(c), 7(a), 7(c)-I

China RoHS

Environment friendly use period (EFUP)	EFUP-50
	An article-related China RoHS declaration table can be found in the download area for the respective article under "Manufacturer declaration". For all articles with EFUP-E, no China RoHS declaration table issued and required.

EU REACH SVHC

REACH candidate substance (CAS No.)	Lead(CAS: 7439-92-1)
SCIP	53bf8611-39e4-4827-a1c7-fb5ee909b255

Phoenix Contact 2025 © - all rights reserved
https://www.phoenixcontact.com

Phoenix Contact USA
586 Fulling Mill Road
Middletown, PA 17057, United States
(+717) 944-1300
info@phoenixcon.com