# CLIPFIX 35 - End bracket

3022218

https://www.phoenixcontact.com/us/products/3022218

Please be informed that the data shown in this PDF document is generated from our online catalog. Please find the complete data in the user documentation. Our general terms of use for downloads are valid.



Quick mounting end clamp for NS 35/7,5 DIN rail or NS 35/15 DIN rail, with marking option, width: 9.5 mm, color: gray

## Your advantages

- Design width of just 9.5 mm
- Large-surface marking
- Phoenix Contact has engineered its CLIPFIX end brackets to maintain a secure grip on the various DIN rail systems

## Commercial data

| | |
|---|---|
| Item number | 3022218 |
| Packing unit | 50 pc |
| Minimum order quantity | 50 pc |
| Sales key | BE07 |
| Product key | BE7111 |
| Catalog page | Page 538 (C-3-2019) |
| GTIN | 4017918156541 |
| Weight per piece (including packing) | 5.268 g |
| Weight per piece (excluding packing) | 5.1 g |
| Customs tariff number | 39269097 |
| Country of origin | PL |

## Technical data

### Product properties

| | |
|---|---|
| Product type | End bracket |

Data management status

| | |
|---|---|
| Article revision | 11 |

### Dimensions

| | |
|---|---|
| Dimensional drawing | 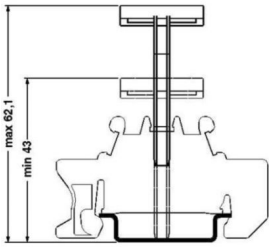 |
| Width | 9.5 mm |
| Height | 55.6 mm |
| Depth on NS 35/7,5 | 35.5 mm |
| Length | 55.6 mm |

### Material specifications

| | |
|---|---|
| Color | gray (RAL 7042) |
| Material | PA |
| Flammability rating according to UL 94 | V2 |
| Static insulating material application in cold | -60 °C |
| Temperature index of insulation material (DIN EN 60216-1 (VDE 0304-21)) | 125 °C |
| Relative insulation material temperature index (Elec., UL 746 B) | 125 °C |
| Fire protection for rail vehicles (DIN EN 45545-2) R22 | HL 1 - HL 2 |
| Fire protection for rail vehicles (DIN EN 45545-2) R23 | HL 1 - HL 2 |
| Fire protection for rail vehicles (DIN EN 45545-2) R24 | HL 1 - HL 2 |

### Environmental and real-life conditions

Ambient conditions

| | |
|---|---|
| Ambient temperature (operation) | -60 °C ... 105 °C (max. short-term operating temperature RTI Elec.) |
| Ambient temperature (storage/transport) | -25 °C ... 60 °C (for a short time, not exceeding 24 h, -60 °C to +70 °C) |
| Ambient temperature (assembly) | -5 °C ... 70 °C |
| Ambient temperature (actuation) | -5 °C ... 70 °C |
| Permissible humidity (storage/transport) | 30 % ... 70 % |

## Mounting

| | |
|---|---|
| Mounting type | NS 35/7,5 |
| | NS 35/15 |

## Drawings

Dimensional drawing

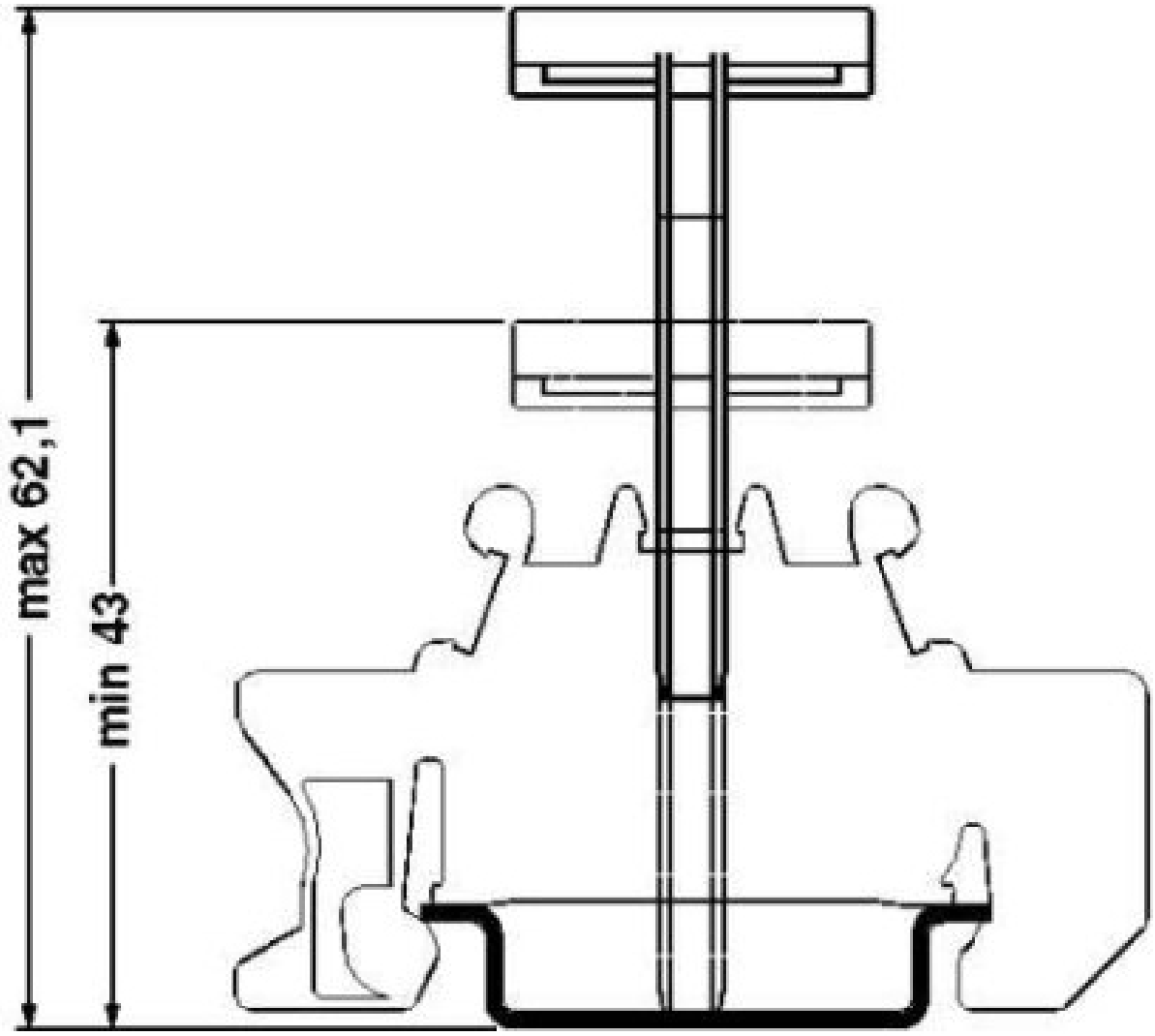

Dimensional drawing

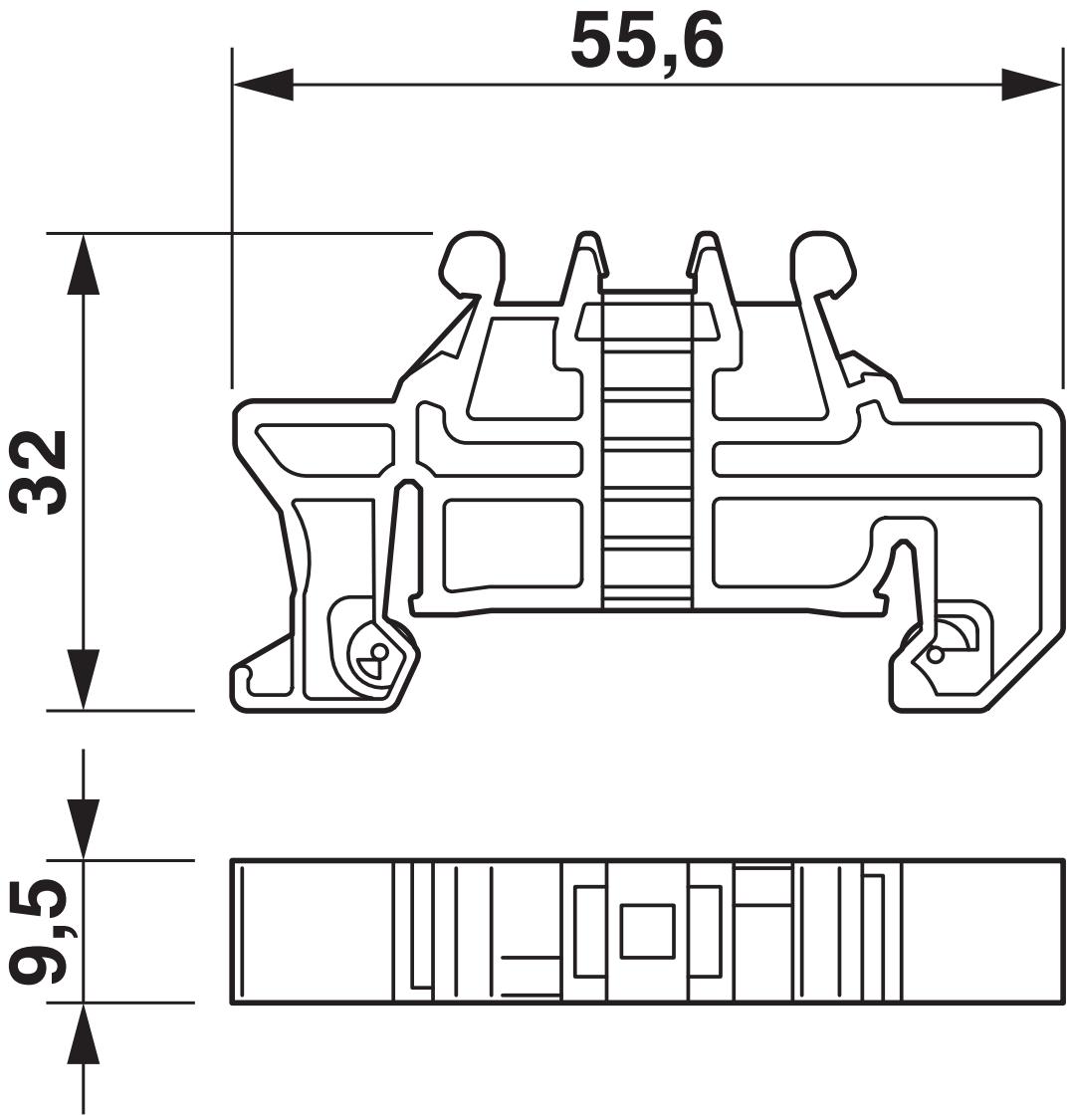

## Classifications

### ECLASS

| | |
|---|---|
| ECLASS-11.0 | 27141135 |
| ECLASS-12.0 | 27141135 |
| ECLASS-13.0 | 27250302 |

### ETIM

| | |
|---|---|
| ETIM 9.0 | EC001041 |

### UNSPSC

| | |
|---|---|
| UNSPSC 21.0 | 39121400 |

## Environmental product compliance

EU RoHS

| | |
|---|---|
| Fulfills EU RoHS substance requirements | Yes, No exemptions |

China RoHS

| | |
|---|---|
| Environment friendly use period (EFUP) | EFUP-E |
| | No hazardous substances above the limits |

EU REACH SVHC

| | |
|---|---|
| REACH candidate substance (CAS No.) | No substance above 0.1 wt% |


Phoenix Contact 2024 © - all rights reserved
https://www.phoenixcontact.com



Phoenix Contact USA
586 Fulling Mill Road
Middletown, PA 17057, United States
(+717) 944-1300
info@phoenixcon.com