CP-DMC 1,5 NAT - Coding profile

1790647

https://www.phoenixcontact.com/us/products/1790647

Please be informed that the data shown in this PDF document is generated from our online catalog. Please find the complete data in the user documentation. Our general terms of use for downloads are valid.

Coding profile, for insertion between the coding ribs of the connector and the header following the reflow soldering process, insulating material, color: natural



Commercial data

Item number	1790647
Packing unit	60 pc
Minimum order quantity	60 pc
Sales key	AA08
Product key	AAHZBC
Catalog page	Page 35 (NTK-2014)
GTIN	4046356622318
Weight per piece (including packing)	0.51 g
Weight per piece (excluding packing)	0.44 g
Customs tariff number	39269097
Country of origin	DE

Technical data

Product properties

Product type	Coding element
Product family	Coding
Number of positions	1
Pitch	0 mm

Data management status

Article revision	03

Dimensions

Pitch	0 mm

Drawings

Schematic diagram

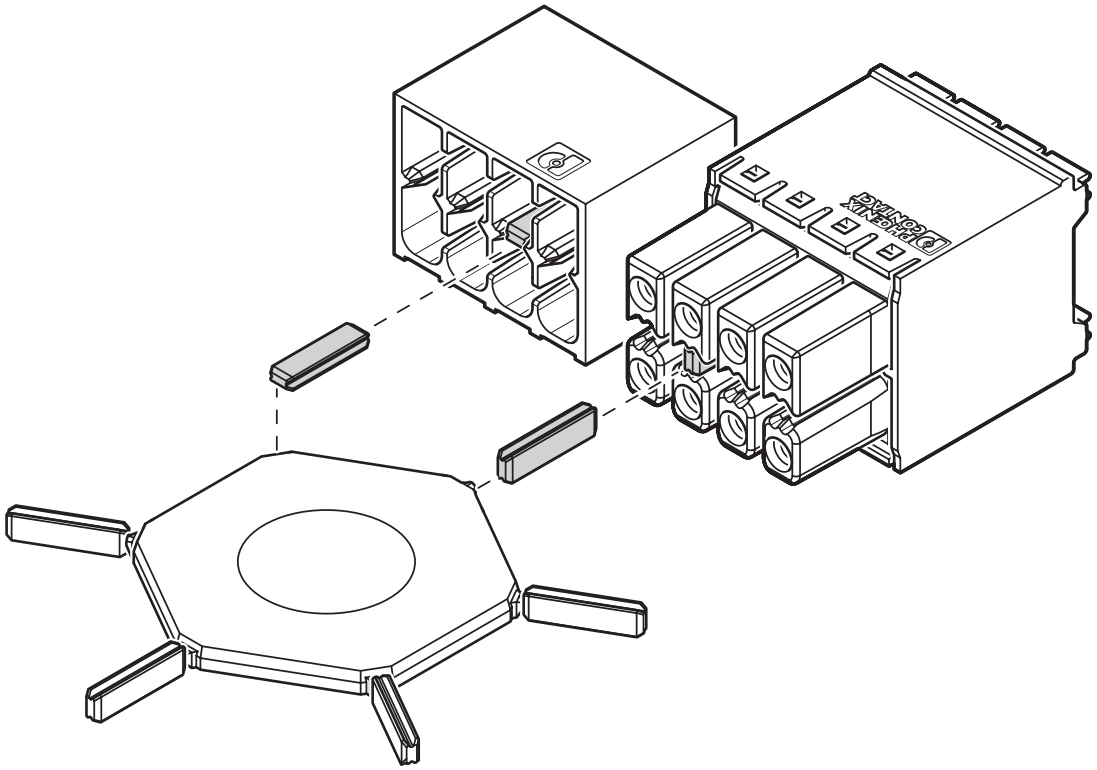

Classifications

ECLASS

ECLASS-11.0	27460401
ECLASS-12.0	27460401
ECLASS-13.0	27460401

ETIM

ETIM 9.0	EC002943

UNSPSC

UNSPSC 21.0	39121400

Environmental product compliance

EU RoHS

Fulfills EU RoHS substance requirements	Yes, No exemptions

China RoHS

Environment friendly use period (EFUP)	EFUP-E
	No hazardous substances above the limits

EU REACH SVHC

REACH candidate substance (CAS No.)	No substance above 0.1 wt%

Phoenix Contact 2024 © - all rights reserved
https://www.phoenixcontact.com

Phoenix Contact USA
586 Fulling Mill Road
Middletown, PA 17057, United States
(+717) 944-1300
info@phoenixcon.com