NS 15 WH PERF 2000MM-VPE 10 - DIN rail perforated

1204096

https://www.phoenixcontact.com/us/products/1204096

Please be informed that the data shown in this PDF document is generated from our online catalog. Please find the complete data in the user documentation. Our general terms of use for downloads are valid.



DIN rail perforated, Pack of 10 (20 m), acc. to EN 60715, material: Steel, Galvanized, white passivated, Standard profile, color: silver

Commercial data

Item number	1204096
Packing unit	10 m
Minimum order quantity	20 m
Sales key	BE72
Product key	BE7223
Catalog page	Page 523 (C-3-2019)
GTIN	4017918106430
Weight per piece (including packing)	308 g
Weight per piece (excluding packing)	308 g
Customs tariff number	72166190
Country of origin	DE

NS 15 WH PERF 2000MM-VPE 10 - DIN rail perforated

1204096

https://www.phoenixcontact.com/us/products/1204096

Technical data

Product properties

Product type	DIN rail

Data management status

Article revision	02

Dimensions

Dimensional drawing	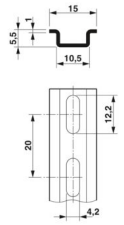
Width	15 mm
Hole width	12.2 mm
Hole height	4.2 mm
Depth	5.5 mm
Length	2000 mm
Drill hole spacing	20 mm

Material specifications

Color	silver-colored
Material	Steel
Coating	Galvanized, white passivated

Standards and regulations

Connection in acc. with standard	IEC / EN
Tests	acc. to EN 60715

NS 15 WH PERF 2000MM-VPE 10 - DIN rail perforated

1204096

https://www.phoenixcontact.com/us/products/1204096

Drawings

Dimensional drawing

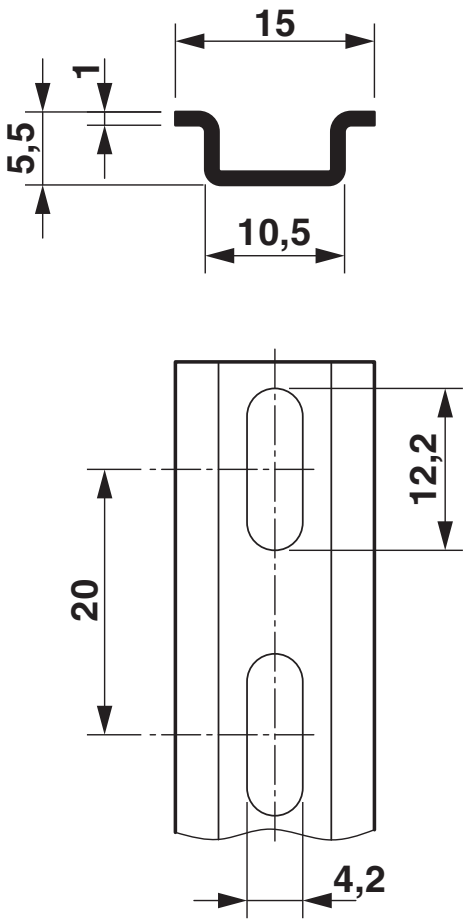

Classifications

ECLASS

ECLASS-11.0	27400602
ECLASS-13.0	27400602
ECLASS-12.0	27400602

ETIM

ETIM 9.0	EC001285

UNSPSC

UNSPSC 21.0	39121700

Environmental product compliance

EU RoHS

Fulfills EU RoHS substance requirements	Yes, No exemptions

China RoHS

Environment friendly use period (EFUP)	EFUP-E
	No hazardous substances above the limits

EU REACH SVHC

REACH candidate substance (CAS No.)	No substance above 0.1 wt%

Phoenix Contact 2024 © - all rights reserved
https://www.phoenixcontact.com

Phoenix Contact USA
586 Fulling Mill Road
Middletown, PA 17057, United States
(+717) 944-1300
info@phoenixcon.com