NS 35/15 PERF 2000MM - DIN rail perforated

1201730

https://www.phoenixcontact.com/us/products/1201730

Please be informed that the data shown in this PDF document is generated from our online catalog. Please find the complete data in the user documentation. Our general terms of use for downloads are valid.



DIN rail perforated, Pack of 25 (50 m), similar to EN 60715, material: Steel, galvanized, passivated with a thick layer, Standard profile, color: silver

Commercial data

Item number	1201730
Packing unit	25 m
Minimum order quantity	50 m
Sales key	BE72
Product key	BE7244
Catalog page	Page 532 (C-3-2019)
GTIN	4017918017460
Weight per piece (including packing)	1,260 g
Weight per piece (excluding packing)	1,260 g
Customs tariff number	72166190
Country of origin	DE

Technical data

Product properties

Product type	DIN rail

Data management status

Article revision	06

Dimensions

Dimensional drawing	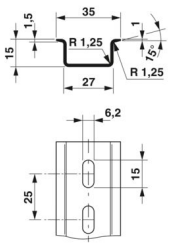
Width	35 mm
Hole width	15 mm
Hole height	6.2 mm
Depth	15 mm
Length	2000 mm
Drill hole spacing	25 mm

Material specifications

Color	silver-colored
Material	Steel
Coating	galvanized, passivated with a thick layer

Standards and regulations

Connection in acc. with standard	IEC / EN
Tests	similar to EN 60715

Drawings

Dimensional drawing

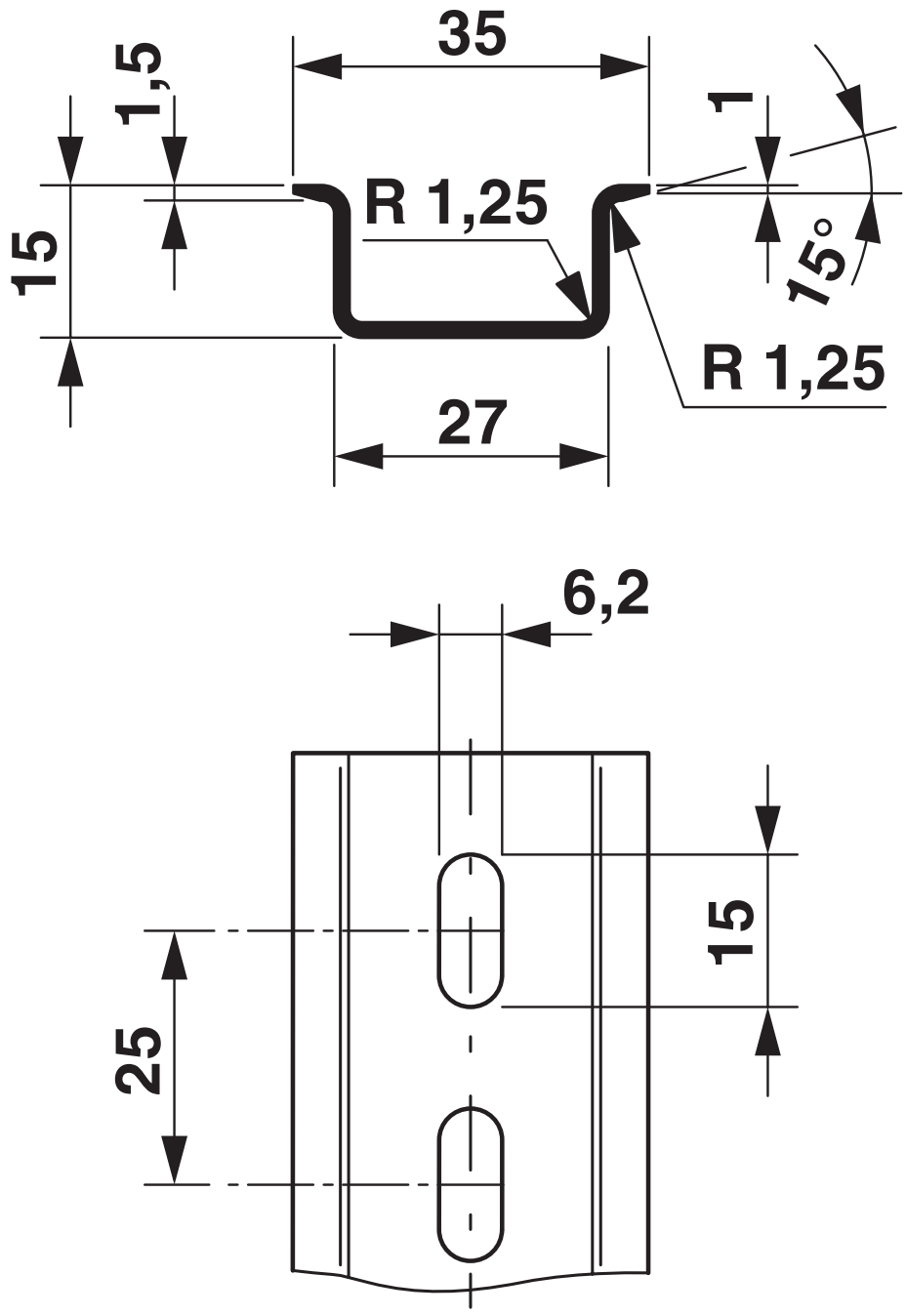

Classifications

ECLASS

ECLASS-11.0	27400602
ECLASS-13.0	27400602
ECLASS-12.0	27400602

ETIM

ETIM 9.0	EC001285

UNSPSC

UNSPSC 21.0	39121700

Environmental product compliance

EU RoHS

Fulfills EU RoHS substance requirements	Yes, No exemptions

China RoHS

Environment friendly use period (EFUP)	EFUP-E
	No hazardous substances above the limits

EU REACH SVHC

REACH candidate substance (CAS No.)	No substance above 0.1 wt%

Phoenix Contact 2024 © - all rights reserved
https://www.phoenixcontact.com

Phoenix Contact USA
586 Fulling Mill Road
Middletown, PA 17057, United States
(+717) 944-1300
info@phoenixcon.com