PROT-M12 FS - Sealing cap

1560251

https://www.phoenixcontact.com/us/products/1560251

Please be informed that the data shown in this PDF document is generated from our online catalog. Please find the complete data in the user documentation. Our general terms of use for downloads are valid.



M12 sealing cap for unoccupied M12 plugs of the sensor/actuator cable, flush-type plugs and I/O devices in the field

Your advantages

- Reliable protection of unoccupied slots during transport and use in the field
- Protected against splash water and dust by the internal seal
- Good haptics due to ribbing on the cap
- Easy assembly without tools

Commercial data

Item number	1560251
Packing unit	5 pc
Minimum order quantity	5 pc
Sales key	BF46
Product key	BF3ZAX
Catalog page	Page 197 (C-6-2019)
GTIN	4046356183659
Weight per piece (including packing)	1.97 g
Weight per piece (excluding packing)	1.46 g
Customs tariff number	39235090
Country of origin	DE

Technical data

Notes

General	Also suitable for M12 PUSH-PULL (device side).

Product properties

Product type	Protective cap
Thread type	M12

Dimensions

Dimensional drawing	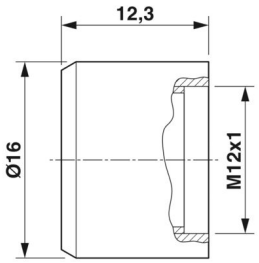
Diameter	16 mm

Material specifications

Flammability rating according to UL 94	HB
Seal material	NBR
Material of grip body	PA

Environmental and real-life conditions

Ambient conditions

Degree of protection	IP67
Ambient temperature (operation)	-40 °C ... 90 °C

Drawings

Dimensional drawing

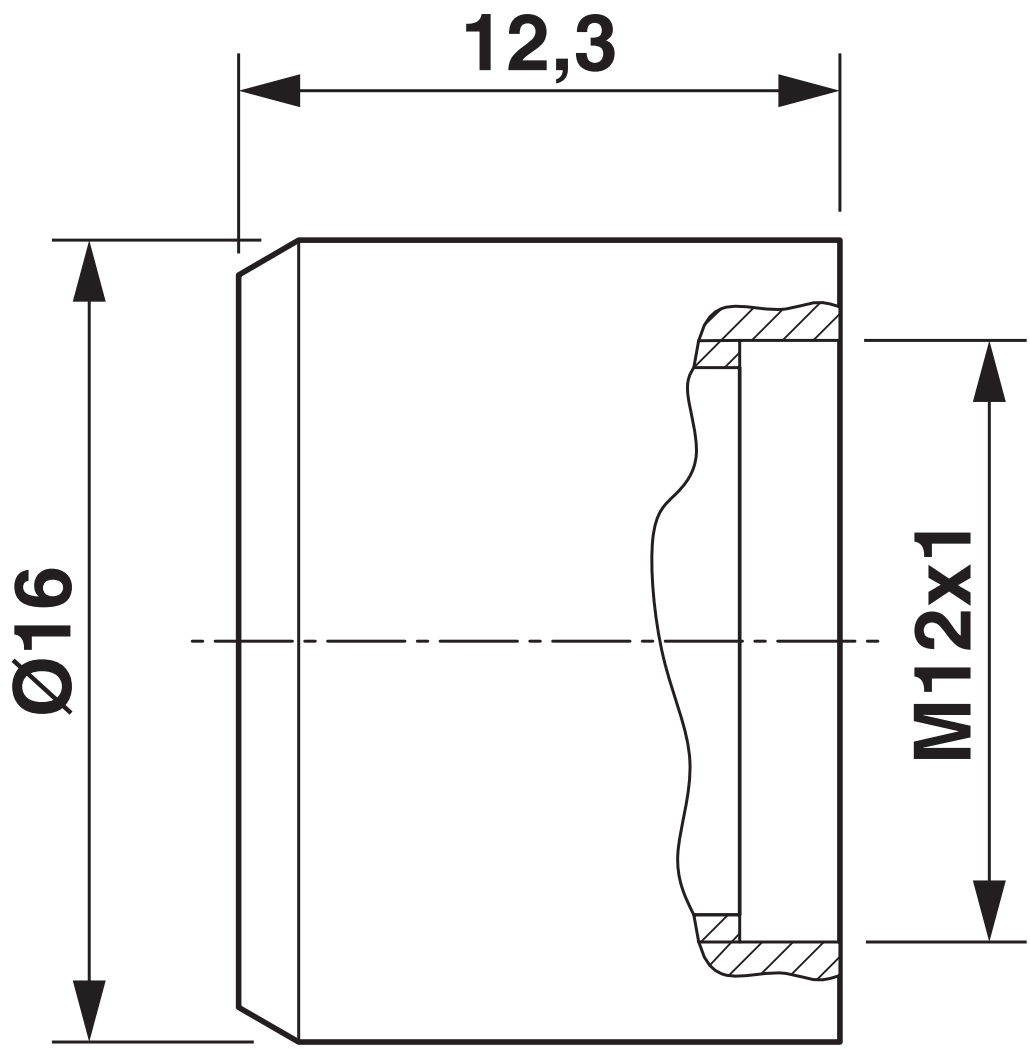

Classifications

ECLASS

ECLASS-11.0	23111190
ECLASS-12.0	23111190
ECLASS-13.0	23111190

ETIM

ETIM 9.0	EC000032

UNSPSC

UNSPSC 21.0	31261500

Environmental product compliance

EU RoHS

Fulfills EU RoHS substance requirements	Yes, No exemptions

China RoHS

Environment friendly use period (EFUP)	EFUP-E
	No hazardous substances above the limits

EU REACH SVHC

REACH candidate substance (CAS No.)	No substance above 0.1 wt%

Phoenix Contact 2024 © - all rights reserved
https://www.phoenixcontact.com

Phoenix Contact USA
586 Fulling Mill Road
Middletown, PA 17057, United States
(+717) 944-1300
info@phoenixcon.com