# SK 20 - Shield connection terminal block

3025189

https://www.phoenixcontact.com/us/products/3025189

Please be informed that the data shown in this PDF document is generated from our online catalog. Please find the complete data in the user documentation. Our general terms of use for downloads are valid.



Shield connection clamp, for shield on busbars, contact resistance < 1 mΩ

## Your advantages

- Easy handling
- Spring-loaded, large-surface pressure plate
- Suitable for direct and busbar mounting
- Knurled screw
- As components, it is not possible to certify shield connections in accordance with the requirements of the directive and standards for electrical equipment in potentially explosive areas. As such, shield connection clamps can be used in the Ex area even without an appropriate approval or marking.

## Commercial data

| | |
|---|---|
| Item number | 3025189 |
| Packing unit | 10 pc |
| Minimum order quantity | 1 pc |
| Sales key | BE75 |
| Product key | BE7512 |
| Catalog page | Page 568 (C-3-2019) |
| GTIN | 4017918130312 |
| Weight per piece (including packing) | 28.8 g |
| Weight per piece (excluding packing) | 28 g |
| Customs tariff number | 85369010 |
| Country of origin | DE |

## Technical data

### Product properties

| | |
|---|---|
| Product type | Shield connection clamp |
| Pitch | 24 mm |
| Number of connections | 1 |
| Number of rows | 1 |

### Electrical properties

| | |
|---|---|
| Maximum power dissipation for nominal condition | 0 W |
| Contact resistance | < 0.001 Ω |

### Connection data

| | |
|---|---|
| Screw thread | M4 |
| Tightening torque | 0.8 ... 0.8 Nm |

### Dimensions

| | |
|---|---|
| Dimensional drawing | 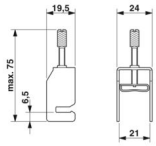  |
| Width | 24 mm |
| Height | 19.5 mm |
| Depth | 75 mm |
| Pitch | 24 mm |

External dimensions

| | |
|---|---|
| Outside diameter | 5 mm ... 20 mm |

### Material specifications

| | |
|---|---|
| Color | silver-colored |
| Material | Steel |

### Cable/line

| | |
|---|---|
| External cable diameter | 5 mm ... 20 mm |

### Mechanical properties

Mechanical data

| | |
|---|---|
| Open side panel | No |

### Mounting

| | |
|---|---|
| Mounting type | Neutral busbar |

## Drawings

Dimensional drawing

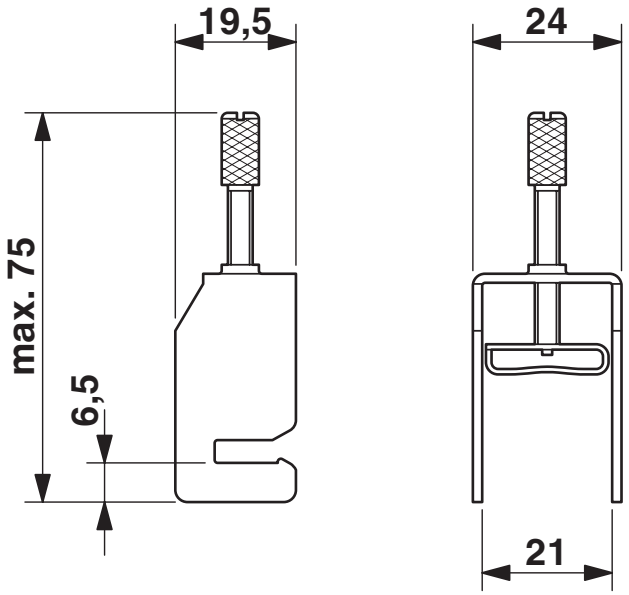

Diagram

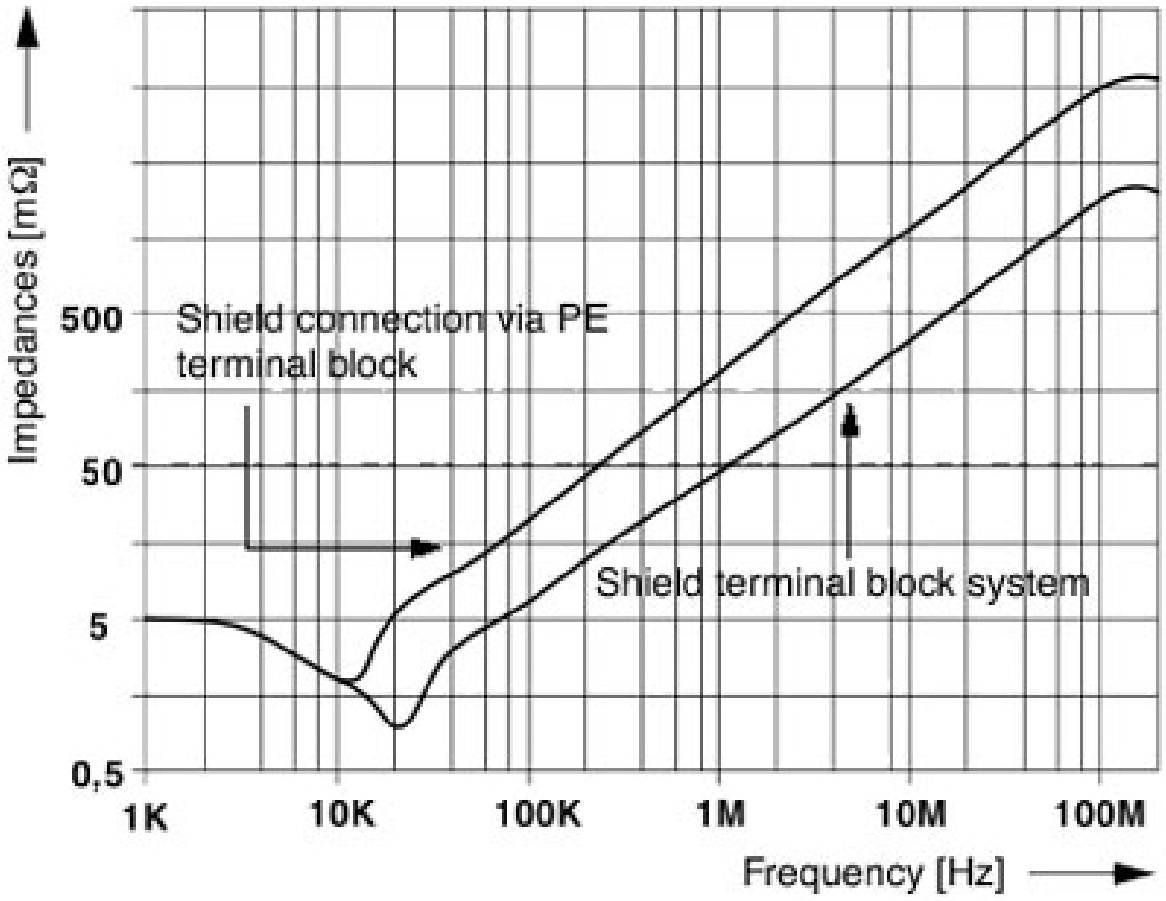
Impedances [mΩ]
500
50
5
0,5
Shield connection via PE terminal block
Shield terminal block system
1K
10K
100K
1M
10M
100M
Frequency [Hz]

Dimensional drawing

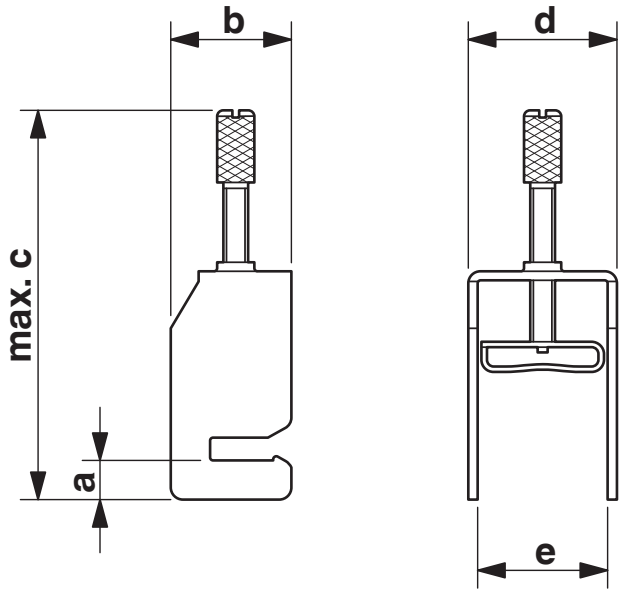

## Classifications

### ECLASS

| | |
|---|---|
| ECLASS-11.0 | 27141150 |
| ECLASS-12.0 | 27141150 |
| ECLASS-13.0 | 27250309 |

### ETIM

| | |
|---|---|
| ETIM 9.0 | EC002020 |

### UNSPSC

| | |
|---|---|
| UNSPSC 21.0 | 39121400 |

## Environmental product compliance

EU RoHS

| | |
|---|---|
| Fulfills EU RoHS substance requirements | Yes, No exemptions |

China RoHS

| | |
|---|---|
| Environment friendly use period (EFUP) | EFUP-E |
| | No hazardous substances above the limits |

EU REACH SVHC

| | |
|---|---|
| REACH candidate substance (CAS No.) | No substance above 0.1 wt% |


Phoenix Contact 2024 © - all rights reserved
https://www.phoenixcontact.com



Phoenix Contact USA
586 Fulling Mill Road
Middletown, PA 17057, United States
(+717) 944-1300
info@phoenixcon.com