REVISION HISTORY			
Rev	DESCRIPTION	DATE	APPROVED

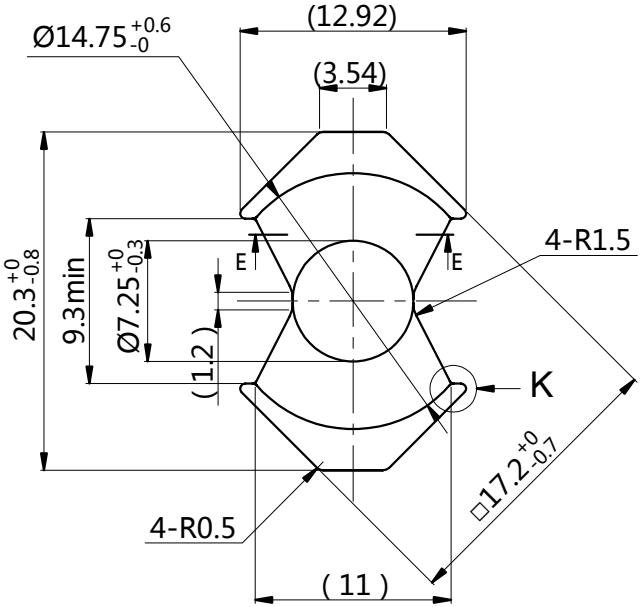

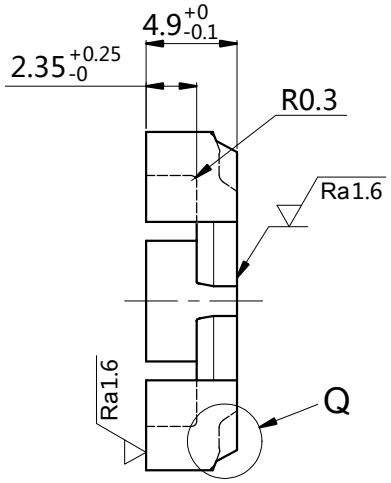

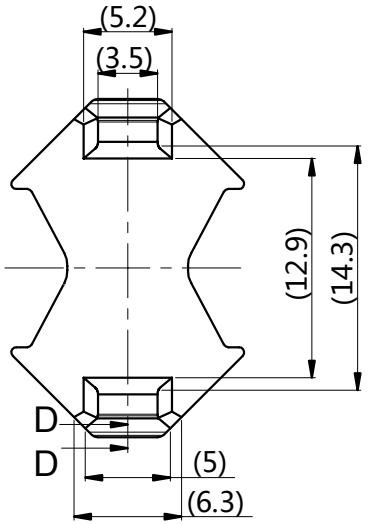

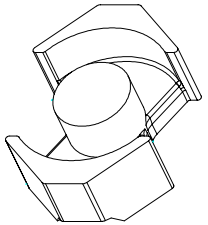

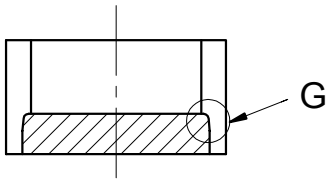

Section E-E

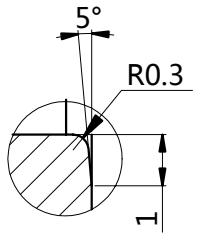

Detail G

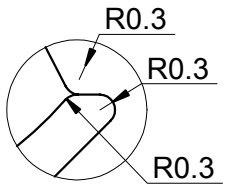

Detail K

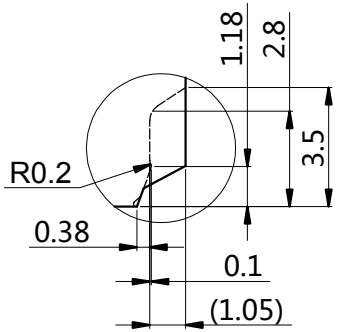

Detail Q

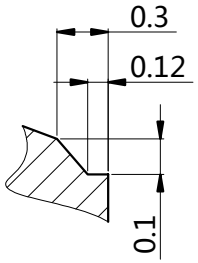

Section D-D

	Scale 2.5 : 1	Material	Customer Part number		
Unit: mm	Standard tolerances ±0.1		Product Name RM-7S-9.8		
Approved by Y.Higuchi	Created by Z.zhang	Document type Production drawing	Rev 00	Drawing No. PY170630M02	
Hitachi Metals (Hong kong) Ltd. Panyu Factory			Date of issue Jun 30 2017		Sheet 1/1