pui audio™ inc
a projects unlimited company
3541 Stop Eight Road • Dayton, Ohio 45414

ADS02008MR-R
20mm Speaker



Product Overview

- 20mm diameter speaker with Neodymium magnet for 86 dB sensitivity
- 0.08W continuous, 0.2W maximum power handling and 8Ω impedance
- Silver polyester cone with pleated surround for great vocal reproduction

Frequency Response (0.08W @ 0.1 meter)

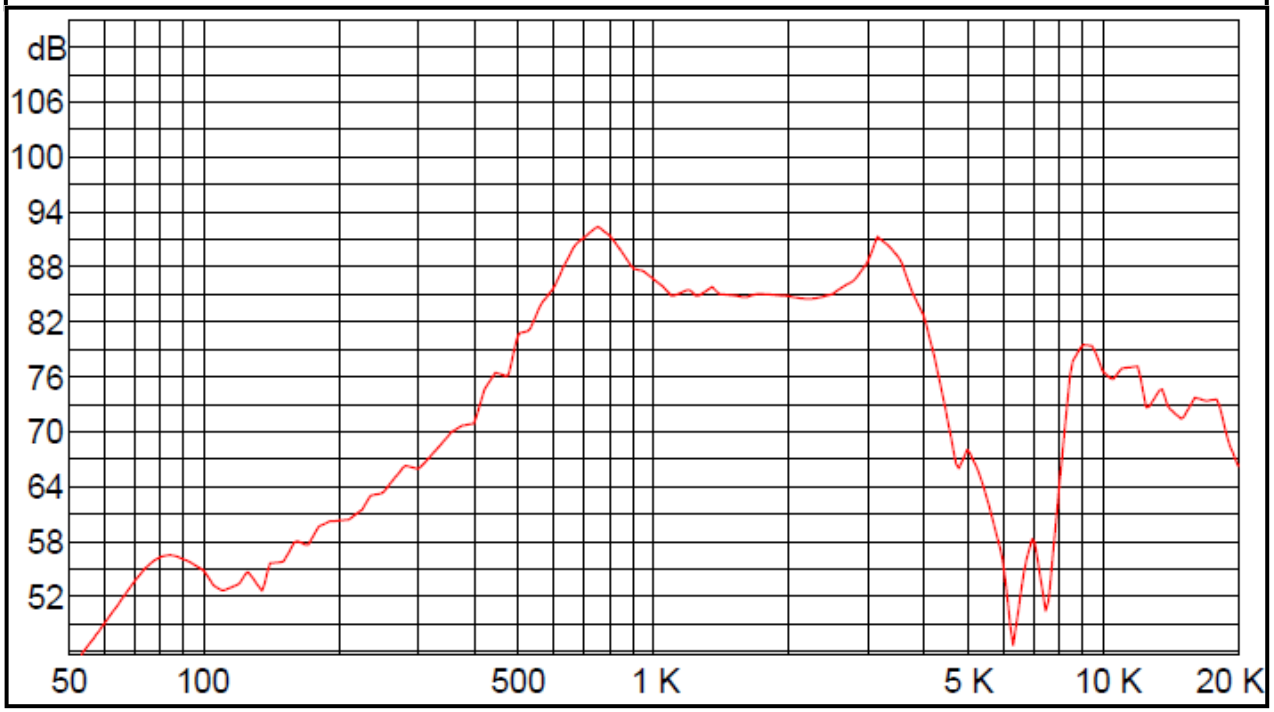

PUI Audio Inc. engages in continuous product improvement. All specifications are subject to change without notice. www.puiaudio.com. Copyright © 2015. Last Revised 3/15.

ADS02008MR-R
20mm Speaker

Mechanical and Environment Testing	
Test Description	**Test Condition**
High Temperature	55°C with random humidity for 96 hours
Low Temperature	-20°C with random humidity for 96 hours
Humidity	40°C with 90% to 95% relative humidity for 96 hours
Vibration	1.5 mm movement modulated at 10 to 55 Hz for 2 hours
Drop Test	75 cm free fall onto 40 mm thick board, 10 cy-
Temperature Cycle Test	-20°C to 55°C, 5 cycles (refer to Temperature Cycle Test Graph)
After tests, speaker shall rest for 1 hours. SPL shall not deviate ±3 dB from pre-test measurement.	

Temperature Cycle Test Graph

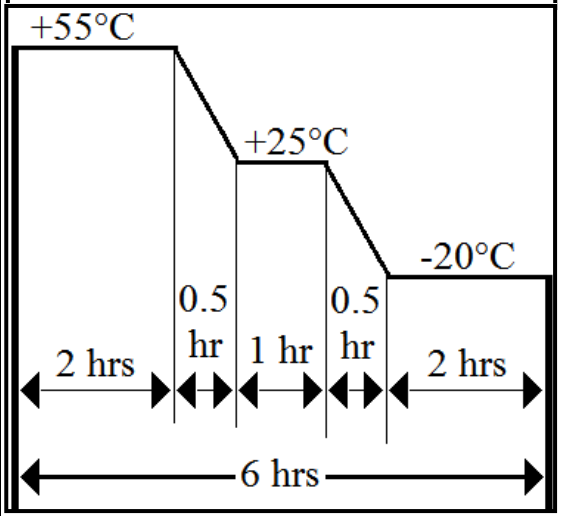

Frequency Response Measurement Setup

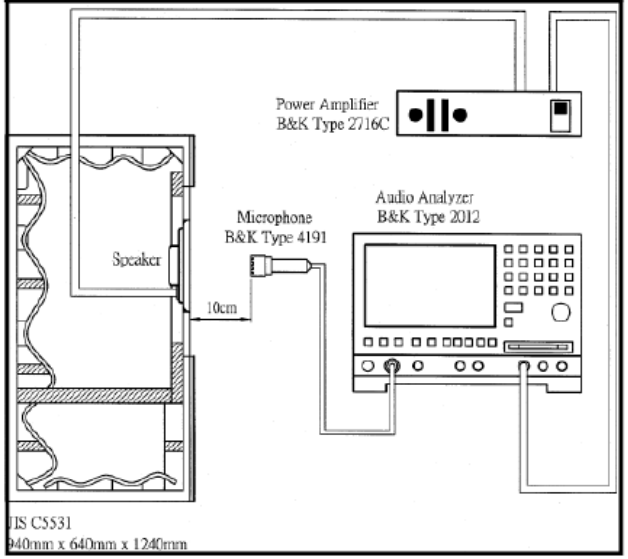

Packaging Information

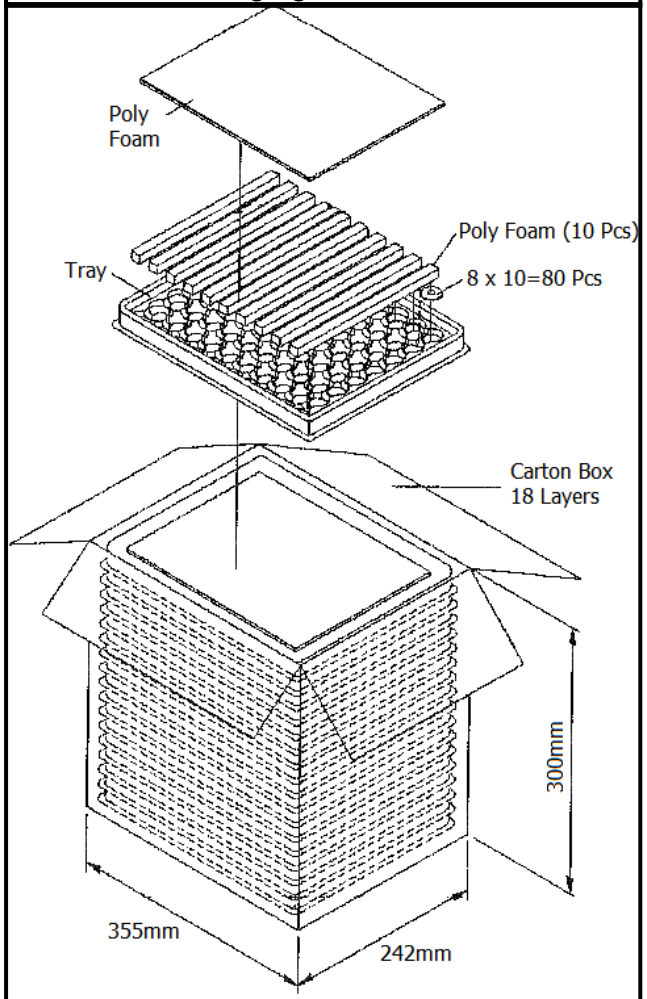

Tray	340mm x 230mm x 20mm	8 x 10 Pcs = 80 Pcs
Carton Box	355mm x 242mm x 300mm	80 x 18 = 1,440 Pcs

PUI Audio Inc. engages in continuous product improvement. All specifications are subject to change without notice. www.puiaudio.com. Copyright © 2015. Last Revised 3/15.

SPECIFICATIONS

PARAMETERS	VALUES	UNITS
RATED INPUT POWER	0.08	W
MAX INPUT POWER	0.2	W
IMPEDANCE	8 ± 15%	OHM
OUTPUT SPL @ 0.08W/0.1M (AT 1.0, 1.2, 1.5, 2.0 kHz)	86 ± 3	dBA
DISTORTION (MAX.)	5%	-
RESONANT FREQUENCY	750 ± 20%	Hz
FREQUENCY RANGE	750 ~ 5,000	Hz
HOUSING MATERIAL	ABS	-
CONE MATERIAL	SILVER POLYESTER	-
MAGNET MATERIAL	Nd-Fe-B	-
OPERATING TEMPERATURE	-20 ~ +55	°C
WEIGHT	2.3	grams

THIS DOCUMENT CONTAINS DATA PROPRIETARY TO PROJECTS UNLIMITED, INC. ANY USE OR REPRODUCTION, IN ANY FORM, WITHOUT PRIOR WRITTEN PERMISSION OF PROJECTS UNLIMITED, INC. IS PROHIBITED.
©2003, Projects Unlimited Inc.

REVISION HISTORY

LTR	DESCRIPTION	DATE	APPROVED
-	RELEASED FROM ENGINEERING	9/21/2005	
A	ADDED ROHS NOTE #3	11/02/2005	B.R.
B	REVISED TO INVENTOR 3-D DRAWING TEMPLATE	10/15/2008	B.R.

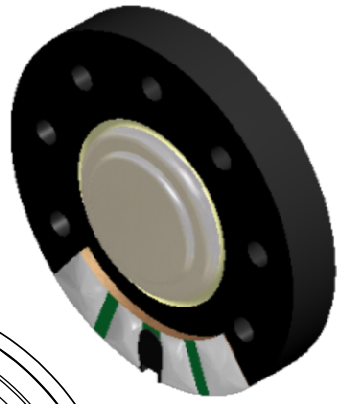

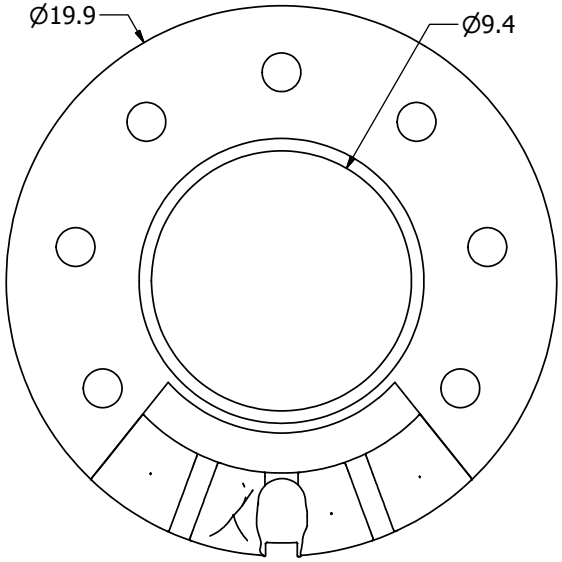

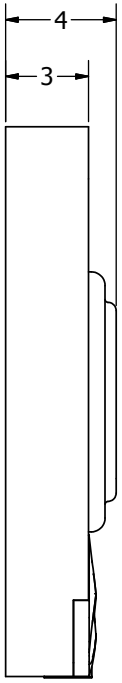

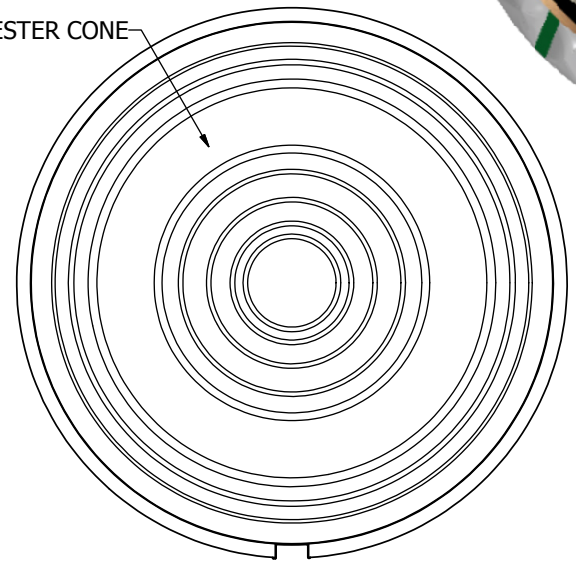

NOTES:

1. ALL DIMENSIONS ARE IN MILLIMETERS.
2. SPECIFICATIONS SUBJECT TO CHANGE OR WITHDRAWL WITHOUT NOTICE.
3. THIS PART IS RoHS 2002/95/EC COMPLIANT.

UNLESS OTHERWISE SPECIFIED: DIMENSIONS ARE IN MILLIMETERS, TOLERANCES ARE ±0.5 AND ANGLES ARE ±3°.	SIZE	Designed by	Date	Checked by	Date	Approved by	Date	Drawn Date
	A3	J.A.F.	9/21/2005	B.R.	9/21/2005	E.P.	9/21/2005	10/15/2008

ADS02008MR-R.idw

pui audio inc
a projects unlimited company

ADS02008MR-R

Speaker

Edition	Sheet
-	1 / 1