SPECIFICATIONS

PARAMETERS	VALUES	UNITS
RATED VOLTAGE	12	Vdc
OPERATING VOLTAGE RANGE	3.3 ~ 24	Vdc
RATED CURRENT (MAX)	10	mA
MINIMUM SPL @ 10 CM	90	dBA
RESONANT FREQUENCY	3,200 ± 500	Hz
TONE OR PULSE RATE	CONTINUOUS	0 pulse /sec
OPERATING TEMPERATURE	-30 ~ +115	°C
STORAGE TEMPERATURE	-40 ~ +125	°C
HOUSING MATERIAL	MPPO	-
TERMINAL MATERIAL	Sn PLATED COPPER	-
WEIGHT	3.7	grams

THIS DOCUMENT CONTAINS DATA PROPRIETARY TO PROJECTS UNLIMITED, INC. ANY USE OR REPRODUCTION, IN ANY FORM, WITHOUT PRIOR WRITTEN PERMISSION OF PROJECTS UNLIMITED, INC. IS PROHIBITED.
©2003, Projects Unlimited Inc.

REVISION HISTORY

LTR	DESCRIPTION	DATE	APPROVED
-	RELEASED FROM ENGINEERING	5/17/2006	
A	REVISED TO INVENTOR 3-D DRAWING TEMPLATE	2/1/2008	B.R.

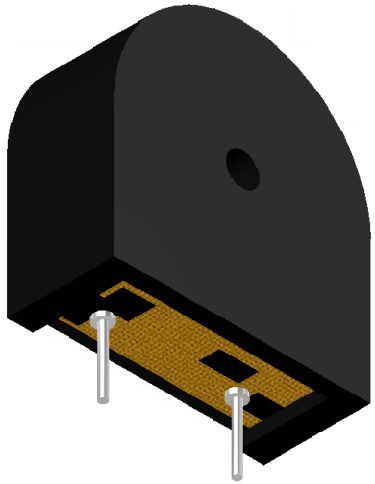

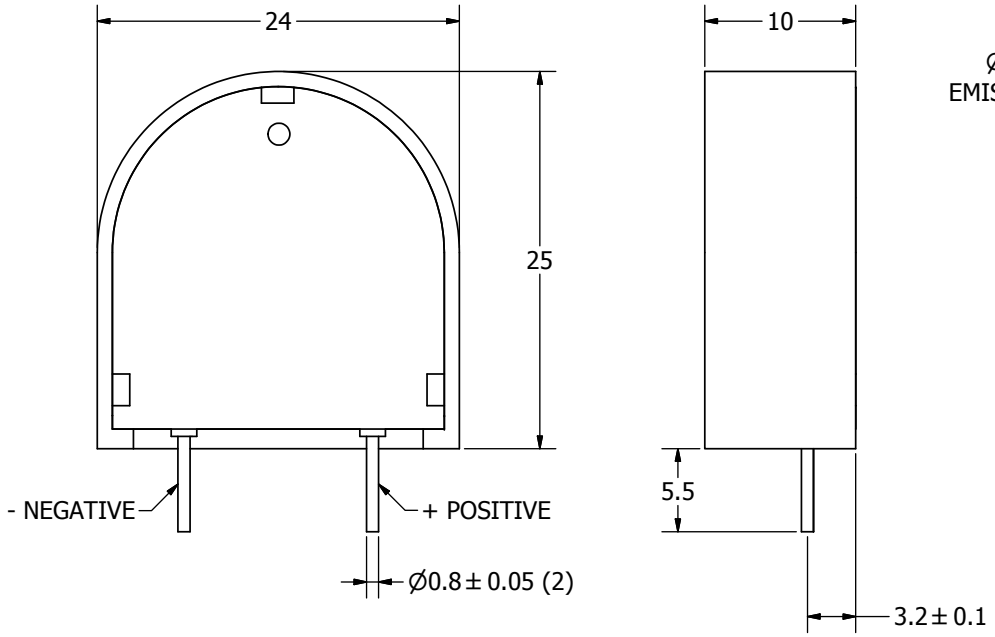

NOTES:

1. ALL DIMENSIONS ARE IN MILLIMETERS.
2. SPECIFICATIONS SUBJECT TO CHANGE OR WITHDRAWL WITHOUT NOTICE.
3. THIS PART IS RoHS 2002/95/EC COMPLIANT.

UNLESS OTHERWISE SPECIFIED: DIMENSIONS ARE IN MILLIMETERS, TOLERANCES ARE ±0.5 AND ANGLES ARE ±3°.	SIZE A3	Designed by	Date	Checked by	Date	Approved by	Date	Drawn Date
		J.D.	5/17/2006	E.P.	5/18/2006	B.R.	5/18/2006	2/1/2008

AI-2532-ST-R.idw

pui audio inc — a projects unlimited company

AI-2532-ST-R

Indicator

Edition	Sheet
-	1 / 1