SPECIFICATIONS

PARAMETERS	VALUES	UNITS
RATED VOLTAGE	12	Vdc
OPERATING VOLTAGE RANGE	6 ~ 14	Vdc
RATED CURRENT (MAX)	35	mA
MINIMUM SPL @ 10 CM	95	dBA
RESONANT FREQUENCY	2,800 ± 500	Hz
TONE OR PULSE RATE	CONTINUOUS	0 pulse /sec
OPERATING TEMPERATURE	-30 ~ +85	°C
STORAGE TEMPERATURE	-40 ~ +95	°C
HOUSING MATERIAL	ABS	-
TERMINAL MATERIAL	LEAD WIRE	-
WEIGHT	41	grams

THIS DOCUMENT CONTAINS DATA PROPRIETARY TO PROJECTS UNLIMITED, INC. ANY USE OR REPRODUCTION, IN ANY FORM, WITHOUT PRIOR WRITTEN PERMISSION OF PROJECTS UNLIMITED, INC. IS PROHIBITED.
©2003, Projects Unlimited Inc.

REVISION HISTORY			
LTR	DESCRIPTION	DATE	APPROVED
-	RELEASED FROM ENGINEERING	9/6/2006	
A	REVISED RESONANT FREQUENCY	1/29/2007	R.W.
B	REVISED TO INVENTOR 3-D DRAWING TEMPLATE	10/11/2007	R.W.

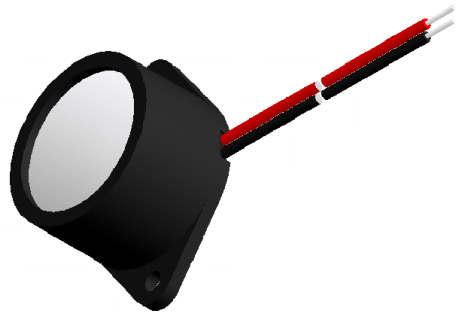

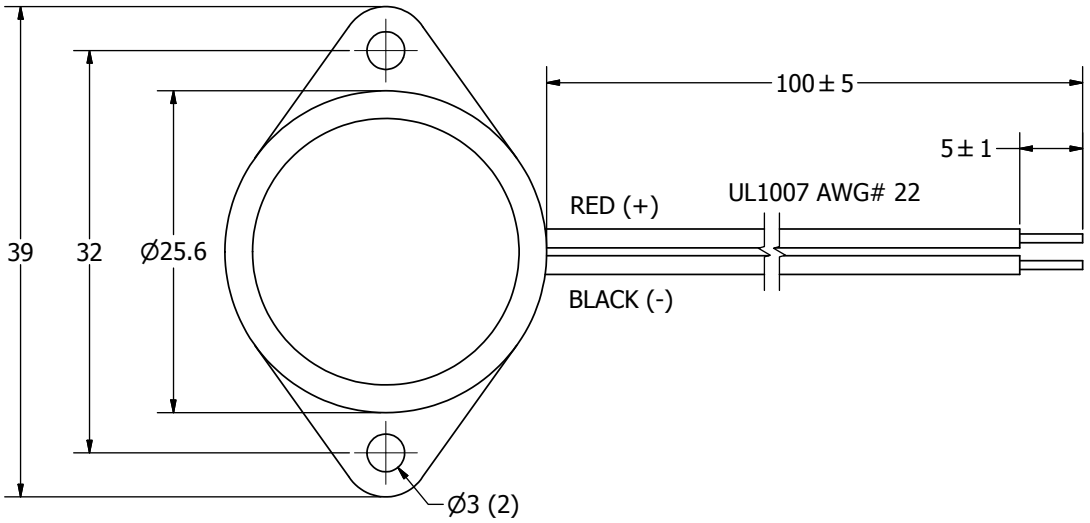

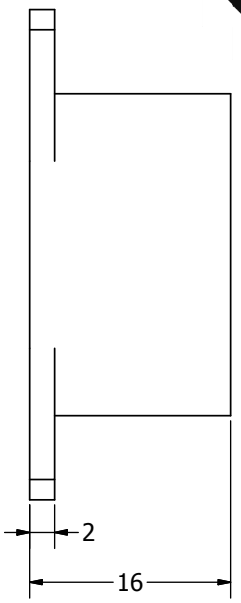

NOTES:

1. ALL DIMENSIONS ARE IN MILLIMETERS.
2. SPECIFICATIONS SUBJECT TO CHANGE OR WITHDRAWL WITHOUT NOTICE.
3. THIS PART IS RoHS 2002/95/EC COMPLIANT.

UNLESS OTHERWISE SPECIFIED: DIMENSIONS ARE IN MILLIMETERS, TOLERANCES ARE ±0.5 AND ANGLES ARE ±3°.	SIZE	Designed by	Date	Checked by	Date	Approved by	Date	Drawn Date
	A3	J.D.	9/6/2006	R.W.	9/6/2006	B.R.	9/6/2006	10/11/2007

AI-2628-TF-LW100-WP-R.idw

pui audio inc — a projects unlimited company

AI-2628-TF-LW100-WP-R

Indicator

Edition	Sheet
-	1 / 1