## SPECIFICATIONS

| PARAMETERS | VALUES | UNITS |
|---|---|---|
| RATED VOLTAGE | 12 | Vdc |
| OPERATING VOLTAGE RANGE | 4 ~ 28 | Vdc |
| RATED CURRENT (MAX) | 10 | mA |
| MINIMUM SPL @ 10 CM | 95 | dBA |
| RESONANT FREQUENCY | 3,500 ± 500 | Hz |
| TONE OR PULSE RATE | SLOW PULSE | 1.2 ± 30% |
| OPERATING TEMPERATURE | -20 ~ +60 | °C |
| STORAGE TEMPERATURE | -30 ~ +70 | °C |
| HOUSING MATERIAL | ABS | - |
| TERMINAL MATERIAL | LEAD WIRE | - |
| WEIGHT | 15 | grams |

THIS DOCUMENT CONTAINS DATA PROPRIETARY TO PROJECTS UNLIMITED, INC. ANY USE OR REPRODUCTION, IN ANY FORM, WITHOUT PRIOR WRITTEN PERMISSION OF PROJECTS UNLIMITED, INC. IS PROHIBITED.
©2003, Projects Unlimited Inc.

REVISION HISTORY

| LTR | DESCRIPTION | DATE | APPROVED |
|---|---|---|---|
| - | RELEASED FROM ENGINEERING | 10/20/2005 | |
| A | REVISED TO INVENTOR 3-D DRAWING TEMPLATE | 2/6/2008 | B.R. |

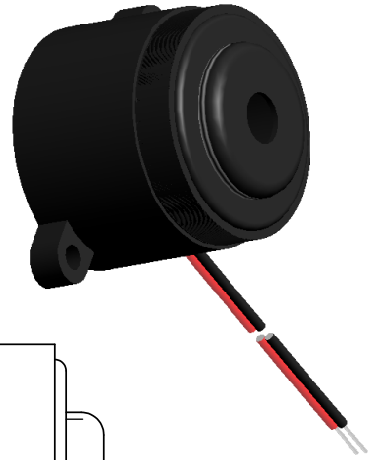

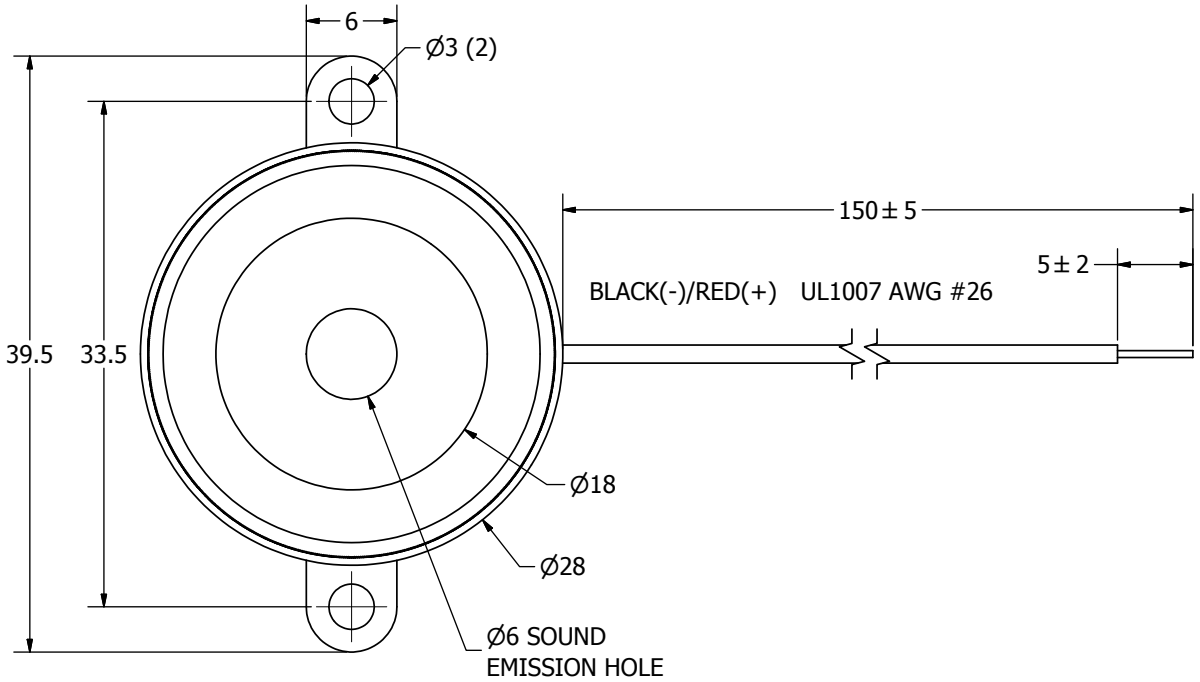


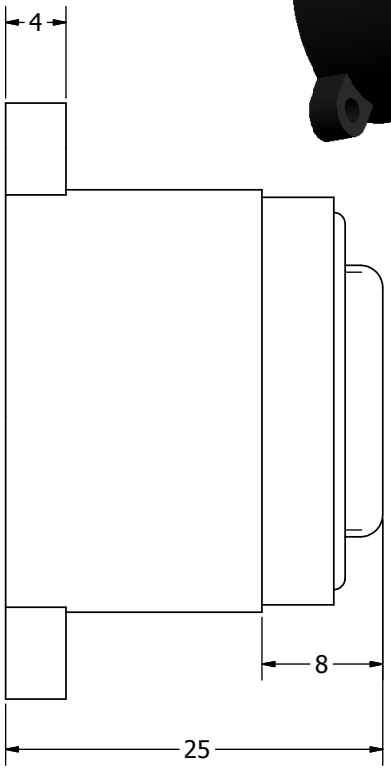


**NOTES:**

1. ALL DIMENSIONS ARE IN MILLIMETERS.
2. SPECIFICATIONS SUBJECT TO CHANGE OR WITHDRAWL WITHOUT NOTICE.
3. THIS PART IS RoHS 2002/95/EC COMPLIANT.

| UNLESS OTHERWISE SPECIFIED: DIMENSIONS ARE IN MILLIMETERS, TOLERANCES ARE ±0.5 AND ANGLES ARE ±3°. | SIZE | Designed by | Date | Checked by | Date | Approved by | Date | Drawn Date |
|---|---|---|---|---|---|---|---|---|
| | A3 | J.A.F. | 10/20/2005 | B.R. | 10/20/2005 | E.P. | 10/20/2005 | 2/6/2008 |

AI-2835-TF-LW150-2.idw

pui audio inc
a projects unlimited company

# AI-2835-TF-LW150-2-R

Indicator

| Edition | Sheet |
|---|---|
| - | 1 / 1 |