SPECIFICATIONS

PARAMETERS	VALUES	UNITS
RATED VOLTAGE	12	Vdc
OPERATING VOLTAGE RANGE	3 ~ 28	Vdc
RATED CURRENT (MAX)	15	mA
MINIMUM SPL @ 10 CM	100	dBA
RESONANT FREQUENCY	3,500 ± 500	Hz
TONE OR PULSE RATE	CONTINUOUS	0 pulse/sec
OPERATING TEMPERATURE	-20 ~ +60	°C
STORAGE TEMPERATURE	-30 ~ +70	°C
HOUSING MATERIAL	ABS	-
TERMINAL MATERIAL	LEAD WIRE	-
WEIGHT	15	grams

THIS DOCUMENT CONTAINS DATA PROPRIETARY TO PROJECTS UNLIMITED, INC. ANY USE OR REPRODUCTION, IN ANY FORM, WITHOUT PRIOR WRITTEN PERMISSION OF PROJECTS UNLIMITED, INC. IS PROHIBITED.

©2003, Projects Unlimited Inc.

REVISION HISTORY

LTR	DESCRIPTION	DATE	APPROVED
-	RELEASED FROM ENGINEERING	10/11/2006	
A	REVISED TO INVENTOR 3-D DRAWING TEMPLATE	2/6/2008	B.R.
B	ADDED NOTE #4	12/5/2013	B.R.
C	REVISED RATED MAX CURRENT TO 15mA	8/19/2019	M.L.



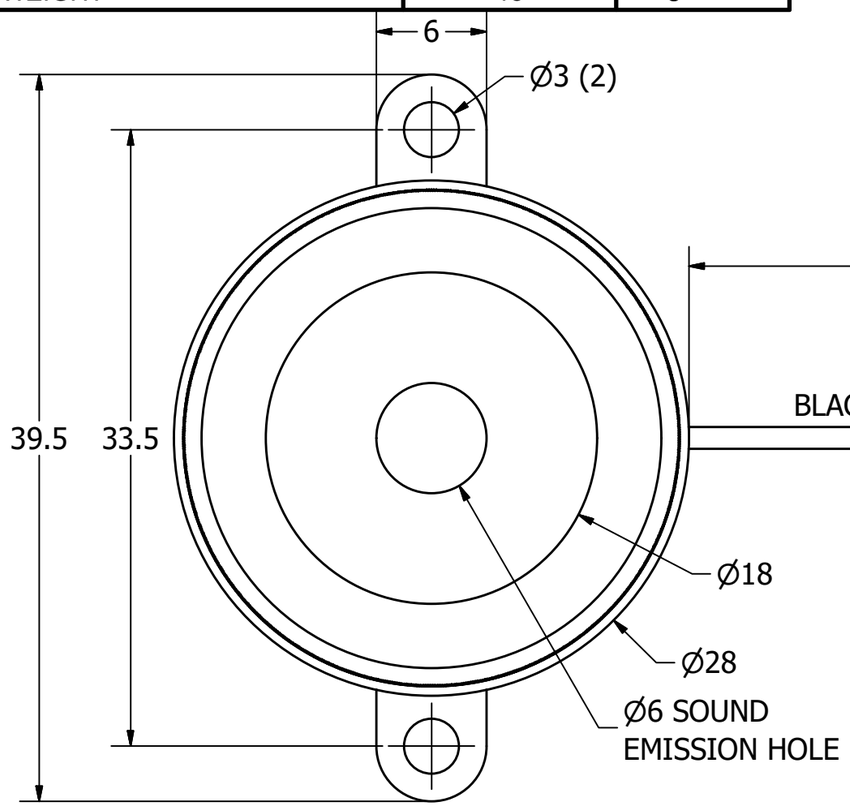

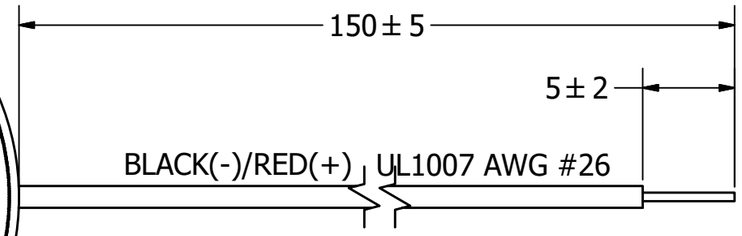

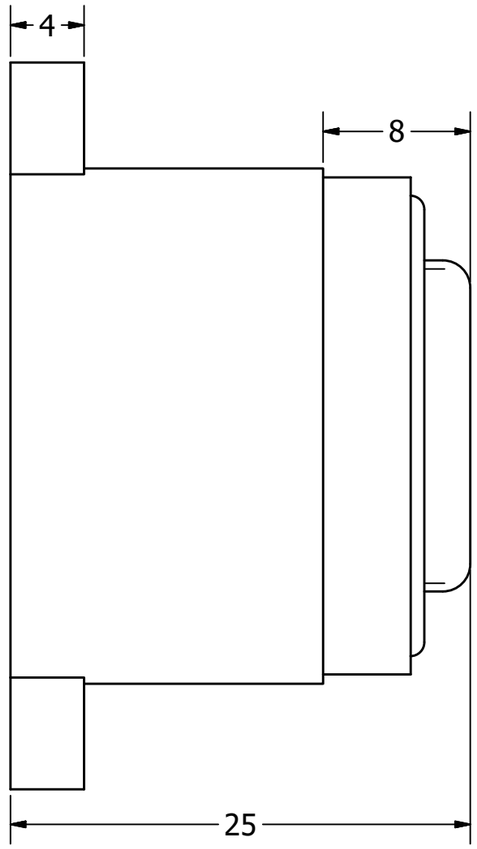

NOTES:

1. ALL DIMENSIONS ARE IN MILLIMETERS.

2. SPECIFICATIONS SUBJECT TO CHANGE OR WITHDRAWL WITHOUT NOTICE.

3. THIS PART IS RoHS 2011/65/EU COMPLIANT.

4. INTERNAL WIRES ARE UL1571, AWG#36 WITH A660 ADHESIVE OVER SOLDER JOINTS ON BENDER AND 504 ADHESIVE OVER SOLDER JOINTS ON PCBA.

UNLESS OTHERWISE SPECIFIED: DIMENSIONS ARE IN MILLIMETERS, TOLERANCES ARE ±0.5 AND ANGLES ARE ±3°.	SIZE	Designed by	Date	Checked by	Date	Approved by	Date	Drawn Date
	A3	J.A.F.	10/11/2006	B.R.	10/11/2006	R.W.	10/11/2006	2/6/2008

AI-2835-TF-LW150-3-R Rev. C.idw

pui audio inc — a projects unlimited company

AI-2835-TF-LW150-3-R Rev. C

Indicator

Edition	Sheet
-	1 / 1