SPECIFICATIONS

PARAMETERS	VALUES	UNITS
RATED VOLTAGE	3	Vdc
OPERATING VOLTAGE RANGE	2 ~ 5	Vdc
RATED CURRENT (MAX)	9	mA
MINIMUM SPL @ 10 CM	100	dBA
RESONANT FREQUENCY	3,500 ± 500	Hz
TONE OR PULSE RATE	CONTINUOUS	0 pulse/sec
OPERATING TEMPERATURE	-30 ~ +70	°C
STORAGE TEMPERATURE	-40~ +85	°C
HOUSING MATERIAL	PBT	-
TERMINAL MATERIAL	Sn PLATED COPPER	-
WEIGHT	8	grams

THIS DOCUMENT CONTAINS DATA PROPRIETARY TO PROJECTS UNLIMITED, INC. ANY USE OR REPRODUCTION, IN ANY FORM, WITHOUT PRIOR WRITTEN PERMISSION OF PROJECTS UNLIMITED, INC. IS PROHIBITED.

©2003, Projects Unlimited Inc.

REVISION HISTORY

LTR	DESCRIPTION	DATE	APPROVED
-	RELEASED FROM ENGINEERING	3/22/2006	
A	REVISED BODY HEIGHT DIMENSION	4/18/2008	B.R.
B	REVISED TO INVENTOR 3-D DRAWING TEMPLATE	6/14/2008	B.R.
C	REVISED HEIGHT AND STAND-OFF DIMENSIONS	9/23/2011	M.L.
D	NEGATIVE POLARITY MARK REMOVED POSITIVE POLARITY MARK RECESSED	7/6/2017	M.V.
E	REVISED HOUSING DIMENSIONS	8/21/2017	M.L.



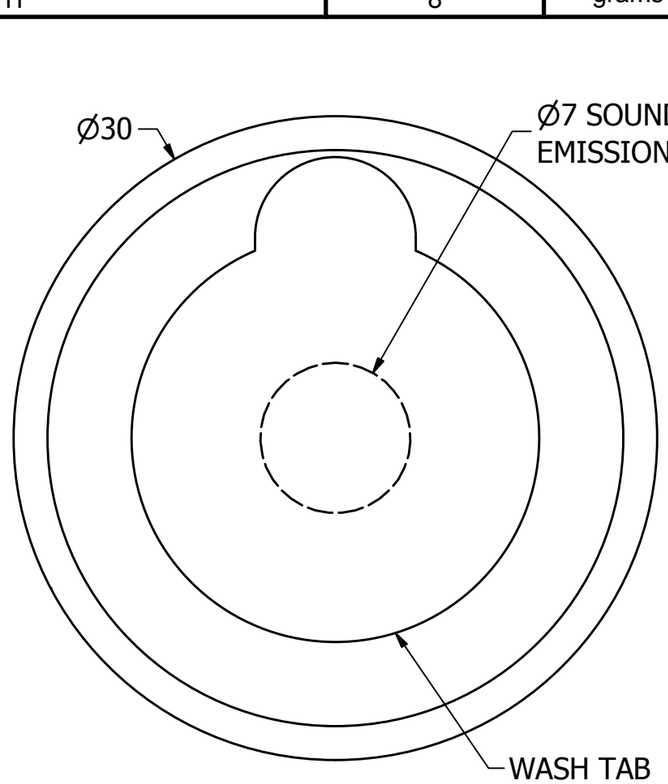

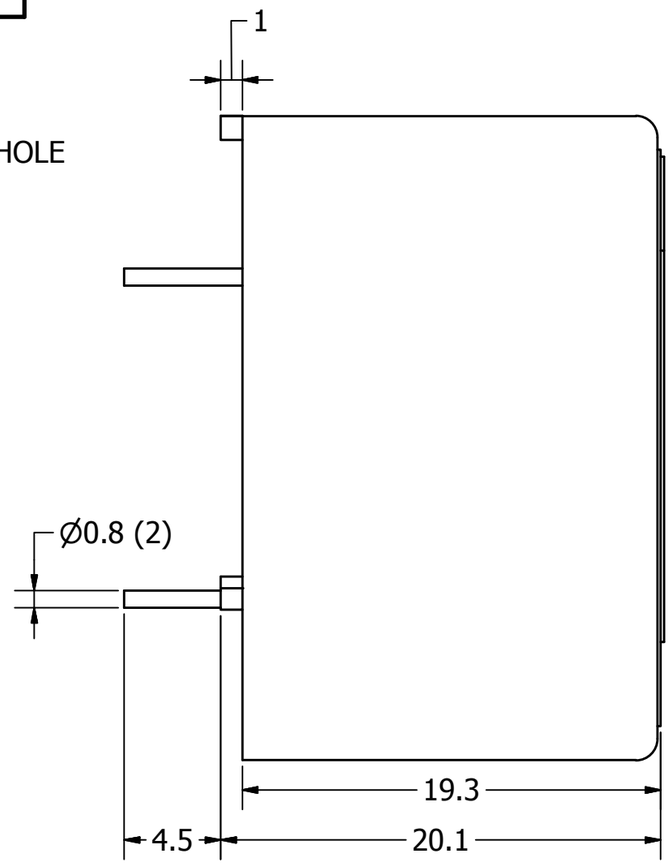

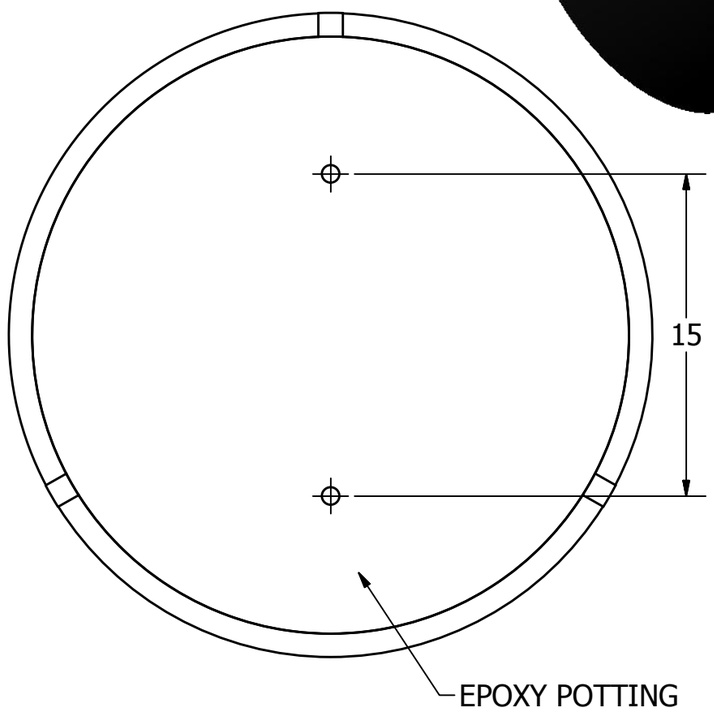

NOTES:

1. ALL DIMENSIONS ARE IN MILLIMETERS.
2. SPECIFICATIONS SUBJECT TO CHANGE OR WITHDRAWL WITHOUT NOTICE.
3. THIS PART IS RoHS 2011/65/EU COMPLIANT.

UNLESS OTHERWISE SPECIFIED: DIMENSIONS ARE IN MILLIMETERS, TOLERANCES ARE ±0.5 AND ANGLES ARE ±3°.	SIZE	Designed by	Date	Checked by	Date	Approved by	Date	Drawn Date
	A3	T.G.	3/22/2006	B.R.	3/22/2006	E.P.	3/22/2006	6/14/2008

AI-3035-TWT-3V-R.idw

pui audio inc — a projects unlimited company

AI-3035-TWT-3V-R

Indicator

Edition	Sheet
-	1 / 1