This document contains data proprietary to PUI Audio Inc. Any use or reproduction, in any form, without prior written permission of PUI Audio Inc. is prohibited.
©2024, PUI Audio Inc.



Data Sheet	AMI-4440-TT-V

Features:

- Piezo Indicator
- IEC 60601-1-8 Compliant Ventilation Tone

Specifications

Parameters	Values	Units
Rated Voltage	5	VDC
Operating Voltage Range	3.3 ~ 5	VDC
Input Peak Current (Maximum at 5VDC)	150	mA
Standby Current (Maximum at 5VDC)	12	mA
Active Current (Maximum at 5VDC / LMH Tones)	20	mA
Minimum SPL (Measured at 10cm / 5VDC)	80	dBA
Typical SPL (Measured at 10cm / 5VDC)	80 ~ 90	dBA
Frequency Range	150 ~ 4000	Hz
Storage Temperature	-30 ~ +85	°C
Operating Temperature	-30 ~ +85	°C
Weight	9	Grams
Housing Material	ABS (black)	-
Terminal Type	Thru-Hole / Pins	-
Acceptable Soldering Methods	Hand Solder, Wave Solder	-
Environmental Compliances	RoHS/REACH	-
Sound Type	**Ventilation**	**IEC60601-1-8 Compliant**

This document contains data proprietary to PUI Audio Inc. Any use or reproduction, in any form, without prior written permission of PUI Audio Inc. is prohibited.
©2024, PUI Audio Inc.

Dimensions

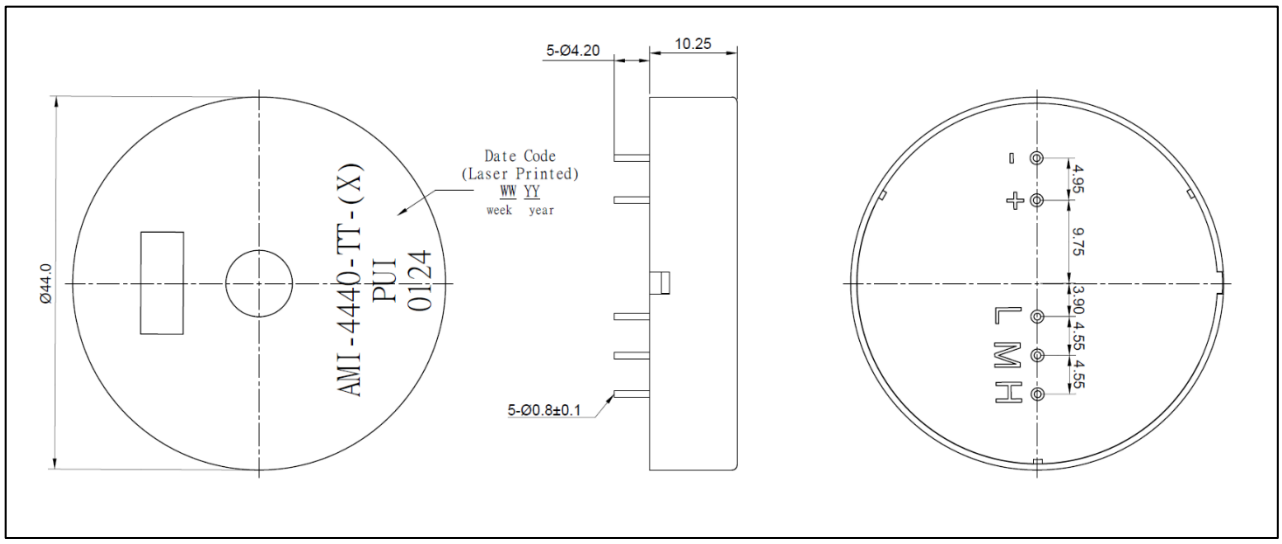

Pin Labeling / Function

Pin	Name	Function
1	-	Power Supply (-)
2	+	Power Supply (+)
3	Low	Low Priority Alarm Control
4	Medium	Medium Priority Alarm Control
5	High	High Priority Alarm Control

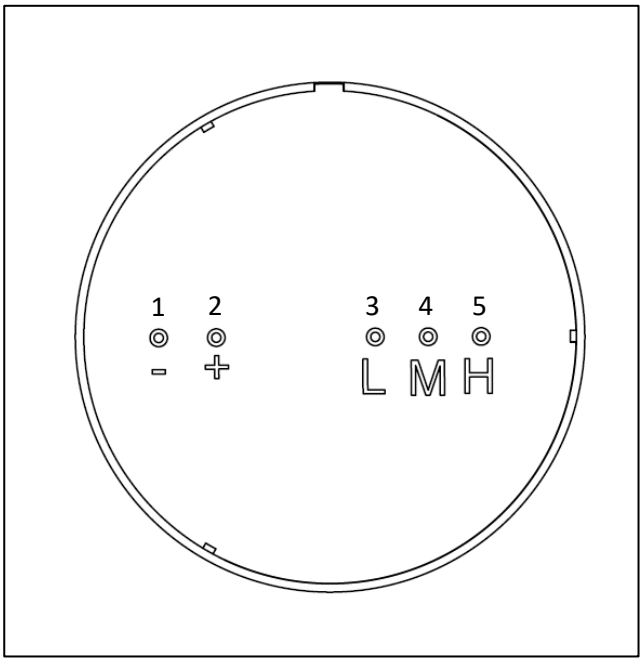

Controls

Priority	Description	Connection
Standby (off)	Silence	(+) → DC+ (-) → Ground
Low	2 alerts repeated every 20 seconds	(+) → DC+ (-) → Ground • L pin to (-)
Medium	3 alerts repeated every 10 seconds	(+) → DC+ (-) → Ground • M pin to (-)
High	10 alerts repeated every 3 seconds	(+) → DC+ (-) → Ground • H pin to (-)

This document contains data proprietary to PUI Audio Inc. Any use or reproduction, in any form, without prior written permission of PUI Audio Inc. is prohibited.
©2024, PUI Audio Inc.

Measurement Method

Standard Test Fixture (Distance: 10cm, 5VDC)

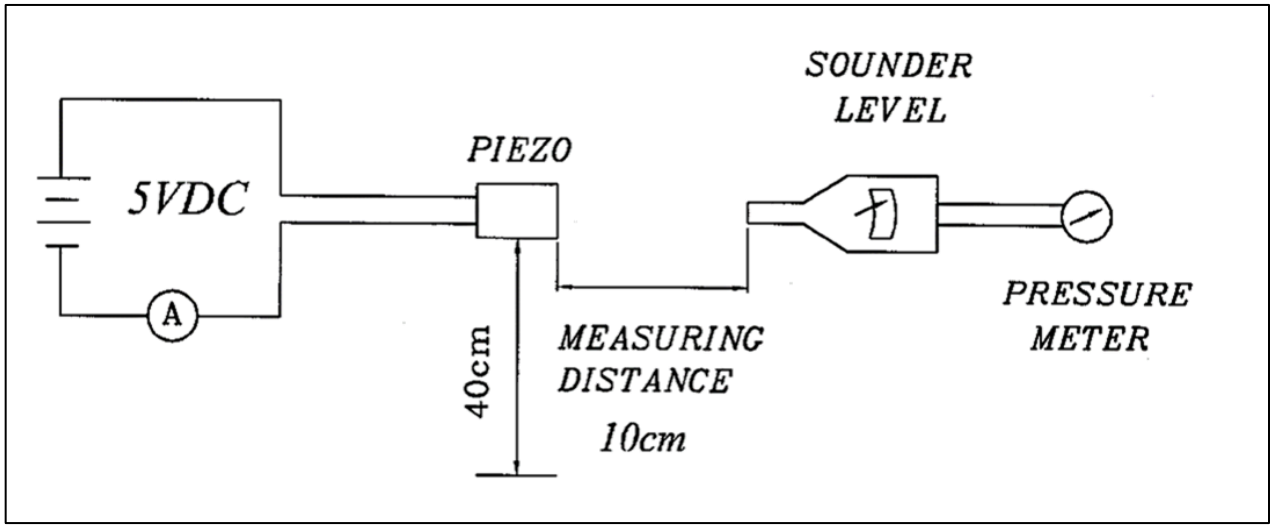

Reliability Testing

Standard Test Condition (+5~+35°C, 45~85% RH)`
Judgement Test Condition (+25±2°C, 60~70% RH)

Type of Test	Test Specifications	Judgement
Solderability	Lead terminals immersed in rosin for 5 seconds, then immersed in solder bath of +270±5°C for 3±1 seconds.	Minimum 90% of lead terminals shall be wet with solder (excluding terminal edges) after test.
Soldering Heat Resistance	Lead terminals immersed up to 1.5mm from part body in solder bath of +300±5°C for 3±0.5 seconds or +260±5°C for 10±1 seconds	No interference in operation after test.
Vibration	1.5mm amplitude vibration with 10-55Hz vibration band frequency applied to each XYZ directions for 2 hours.	Value of oscillation frequency/current consumption should be within 10% of initial value. SPL should deviate no more than ±10dB SPL of initial value.
Drop	Dropped onto wooden board 4cm thick in each XYZ axis 3 times (9 total).	
High Temperature	Temperature: +85°C Duration: 240 hours	Allow 4 hours rest at +25°C after each test. Value of oscillation frequency/current consumption should be within 10% of initial value. SPL should deviate no more than ±10dB SPL of initial value. Allow 4 hours rest at +25°C after each test. Value of oscillation frequency/current consumption should be within 10% of initial value. SPL should deviate no more than ±10dB SPL of initial value.
Low Temperature	Temperature: -30°C Duration: 240 hours	
Humidity	Temperature: +40°C Relative Humidity: 90±5% Duration: 240 hours	
Temperature Cycle	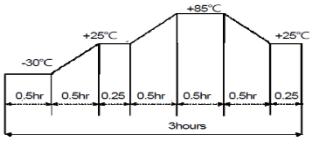 Repeat 5 cycles	
Continuous Life	Duty Cycle: Continuous Voltage: 5V Temperature: +70°C Duration: 48 hours	
Intermittent Life	Duty Cycle: 1 minute on, 1 minute off Voltage: 5V Temperature: +25±2°C Duration: Minimum 5000 cycles (each tone)	

This document contains data proprietary to PUI Audio Inc. Any use or reproduction, in any form, without prior written permission of PUI Audio Inc. is prohibited.
©2024, PUI Audio Inc.

Recommended Soldering Practices

Manual / Hand Solder:

Solder Temperature: 330°C ~ 380°C

Max Solder Time: 2 seconds

Wave Solder Profile

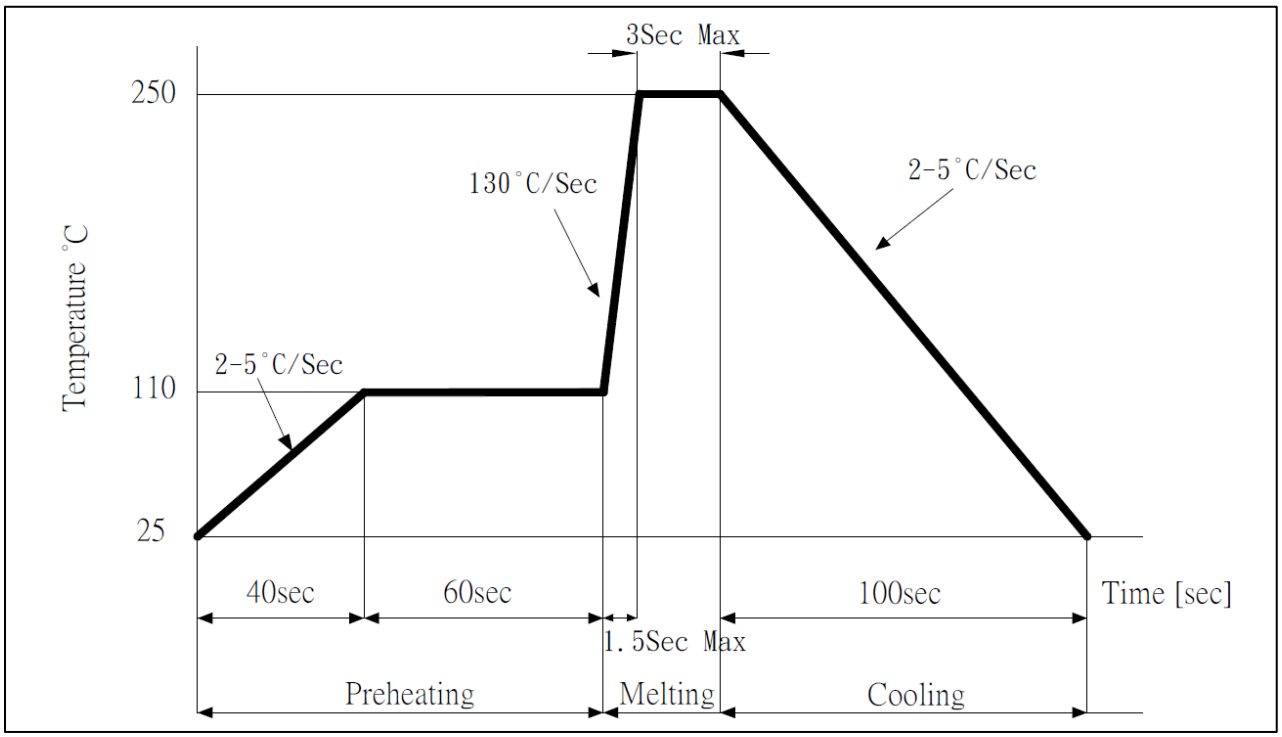

Recommended Land Pattern

This land pattern is advisory only and its use or adaptation is entirely voluntary.

PUI Audio disclaims all liability of any kind associated with the use, application, or adaptation of this land pattern.

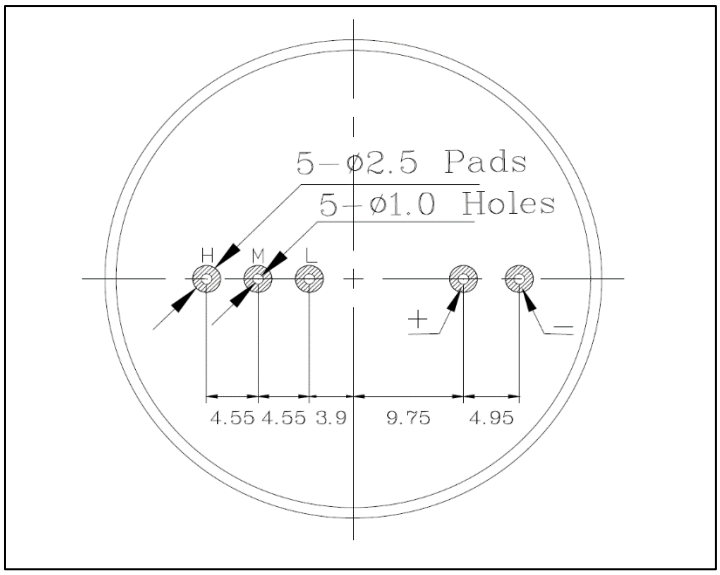

This document contains data proprietary to PUI Audio Inc. Any use or reproduction, in any form, without prior written permission of PUI Audio Inc. is prohibited.
©2024, PUI Audio Inc.

Packaging

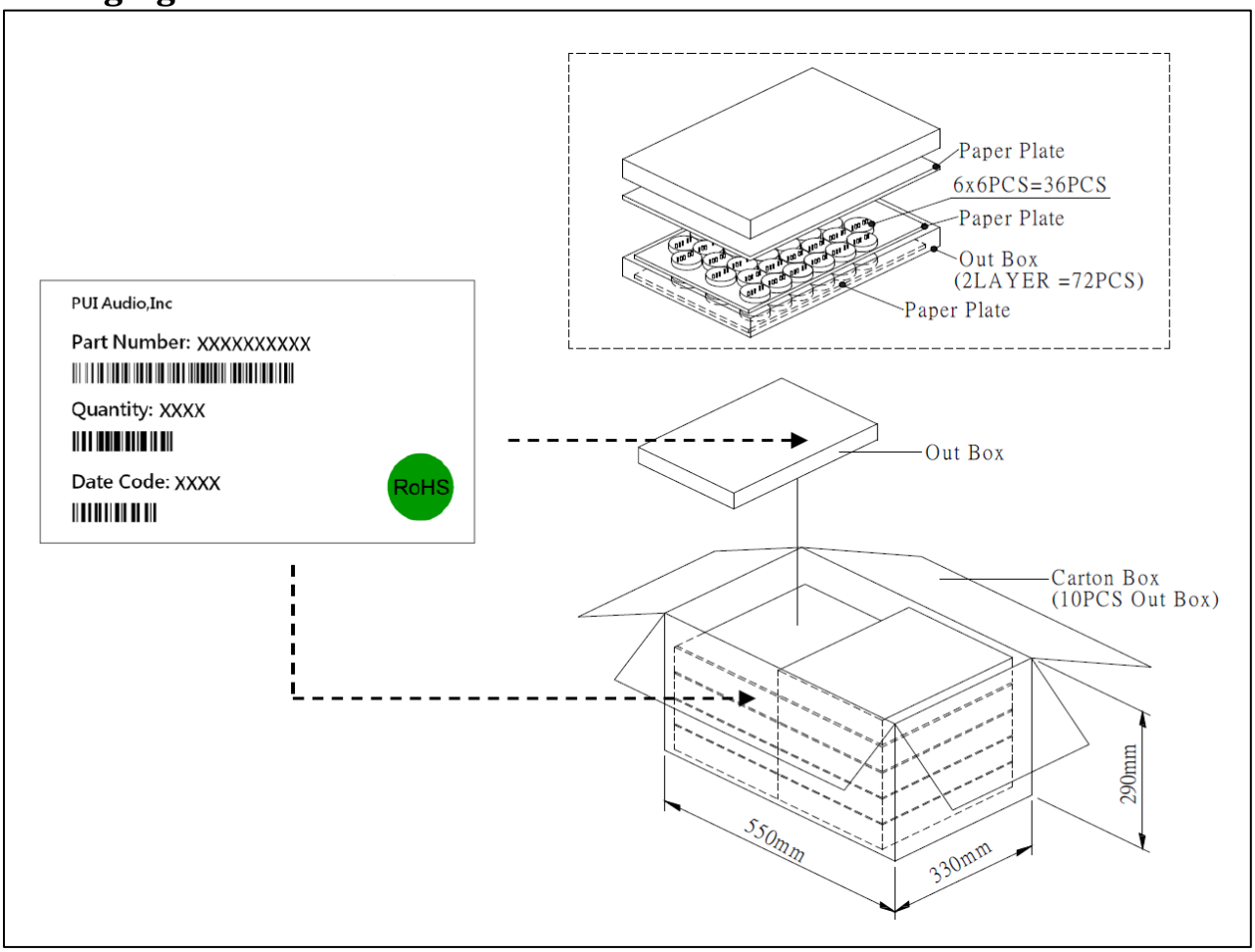

Specifications Revisions

Revision	Description	Date	Approved
A	RELEASED FROM ENGINEERING	8/13/2024	KM

Note:

1. Unless otherwise specified:
   A. All dimensions are in millimeters.
   B. Default tolerances are ±0.5mm and angles are ±3°.
2. Specifications subject to change or withdrawal without notice.