This document contains data proprietary to PUI Audio Inc. Any use or reproduction, in any form, without prior written permission of PUI Audio Inc. is prohibited.
©2019, PUI Audio Inc.

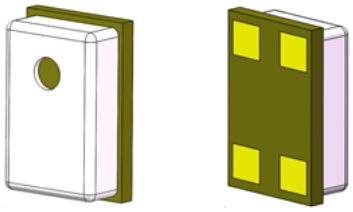

Data Sheet	AMM-2742-T-R

Specifications

Parameters	Values	Units
Sensitivity (1 kHz @ 50cm) 0 dB=1V/Pa	-42 ±1	dB
Rated Voltage	2	VDC
Operating Voltage Range	1.5 to 3.6	VDC
Output Impedance (@ 1 kHz)	300	Ω
Current consumption (at 2 VDC/at 3.6 VDC)	80/150	µA
Signal-to-Noise Ratio (1kHz, 94 dB input, A-weighted)	59	dB
Decreasing Voltage (0 dB=1V/Pa, 3.6 to 1.5 VDC)	0.5	dB
Frequency Range	20 – 20,000	Hz
Total Harmonic Distortion (94 dB @ 50cm, 1 kHz)	0.5%	-
Acoustic Overload Point (AOP) (50cm, 1kHz, 10% THD)	123	dB
Directivity	Omnidirectional	
Acceptable Soldering Methods	Reflow Solder	See page 5 for soldering information
Environmental Compliances	RoHS/Halogen Free	
Power Supply Rejection (PSR, 100 mVpp Square Wave @ 217 Hz, A-weighted)	-90	dB
Weight	<0.3	Grams
Operating Temperature (VDD < 3 VDC)	-40 ~ +100	°C
Operating Temperature (VDD > 3 VDC)	-40 ~ +70	°C
Storage Temperature	-55 ~ +150	°C
MSL (Moisture Sensitivity Level)*	1	-

*MSL level dependent on product remaining in sealed packaging until use

Absolute Maximum Ratings

Parameters	Values	Units
Max Voltage on Any Pin	4	VDC
Max Sound Pressure Level	160	dB
Max Mechanical Shock	10,000	Gs
Max Vibration	Pre-MIL-STD-883 Method 2007, Test Condition B	

This document contains data proprietary to PUI Audio Inc. Any use or reproduction, in any form, without prior written permission of PUI Audio Inc. is prohibited.
©2019, PUI Audio Inc.

Measurement Method (with speaker spaced 50cm from microphone)

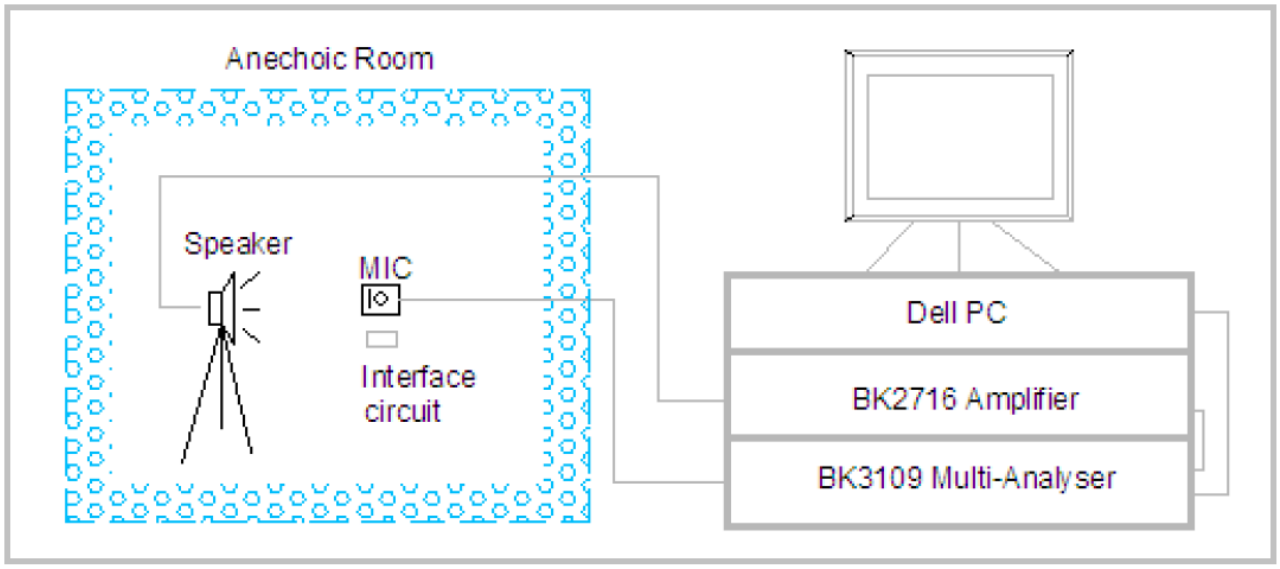

Recommended Drive Circuit

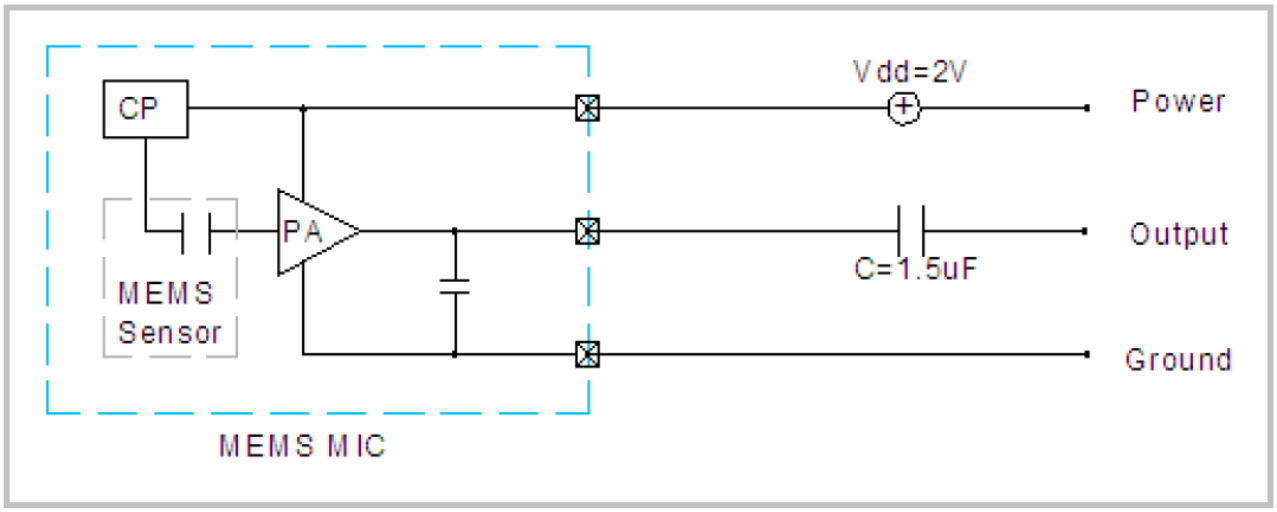

Typical Frequency Response

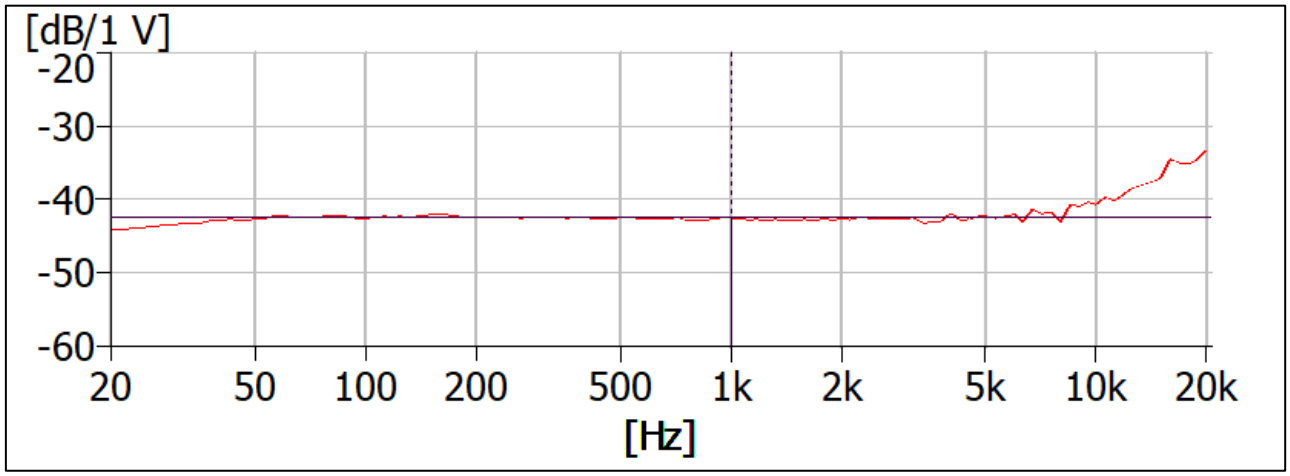

PUI Audio, Inc., 3541 Stop Eight Road, Dayton, OH 45414
Tel: (937) 415-5901 Fax: (937) 415-5925

This document contains data proprietary to PUI Audio Inc. Any use or reproduction, in any form, without prior written permission of PUI Audio Inc. is prohibited.
©2019, PUI Audio Inc.

Frequency Response Mask (100% Pass/Fail Test for Microphones)

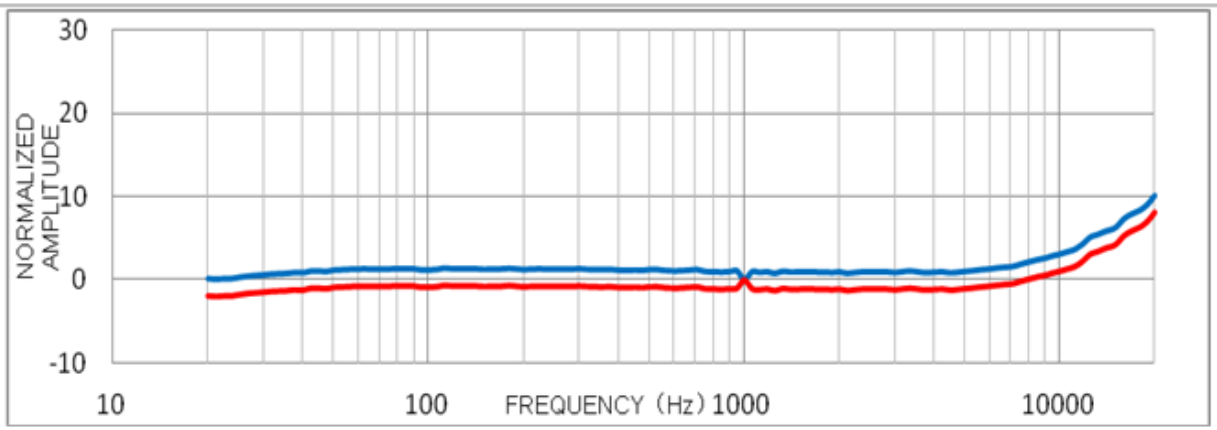

Frequency Response Mask

Frequency (Hz)	Upper	Limit
20	0	-2
50	1	-1
100	1	-1
900	1	-1
1000	0	0
1100	1	-1
2000	1	-1
5000	1	-1
10000	3	1
15000	6	4
20000	10	8

Free-field frequency response normalized to 1kHz sensitivity value.

Total Harmonic Distortion + Noise versus SPL Input (with acoustic source at 50cm)

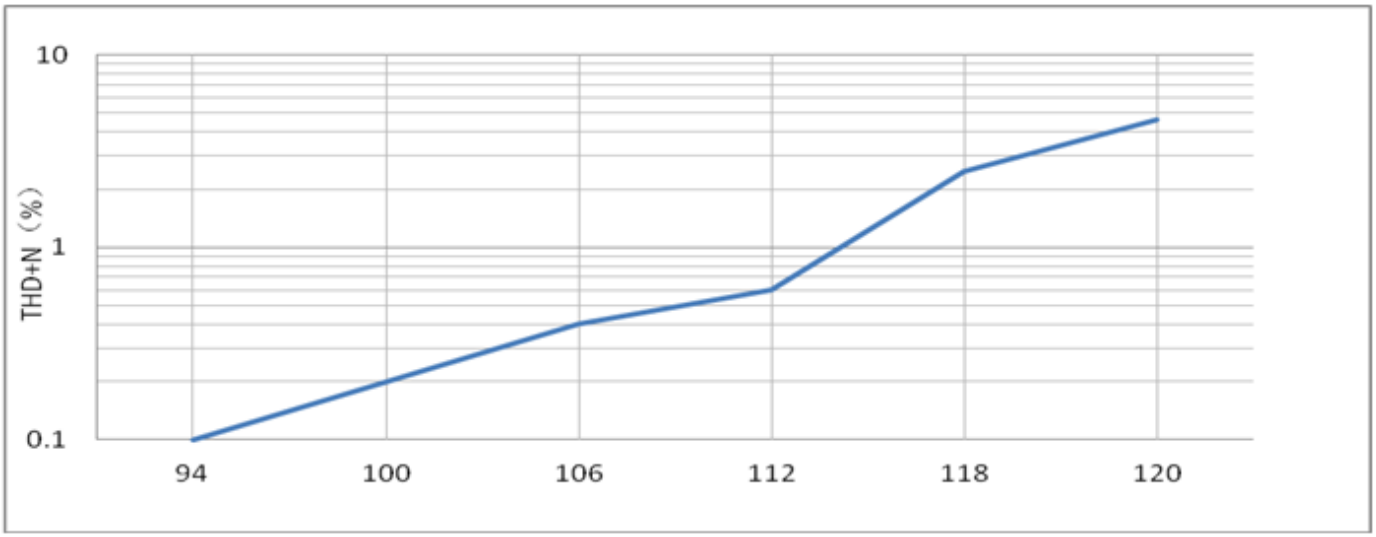

PUI Audio, Inc., 3541 Stop Eight Road, Dayton, OH 45414
Tel: (937) 415-5901 Fax: (937) 415-5925

This document contains data proprietary to PUI Audio Inc. Any use or reproduction, in any form, without prior written permission of PUI Audio Inc. is prohibited.
©2019, PUI Audio Inc.

Microphone Output versus SPL Input (with acoustic source at 50cm)

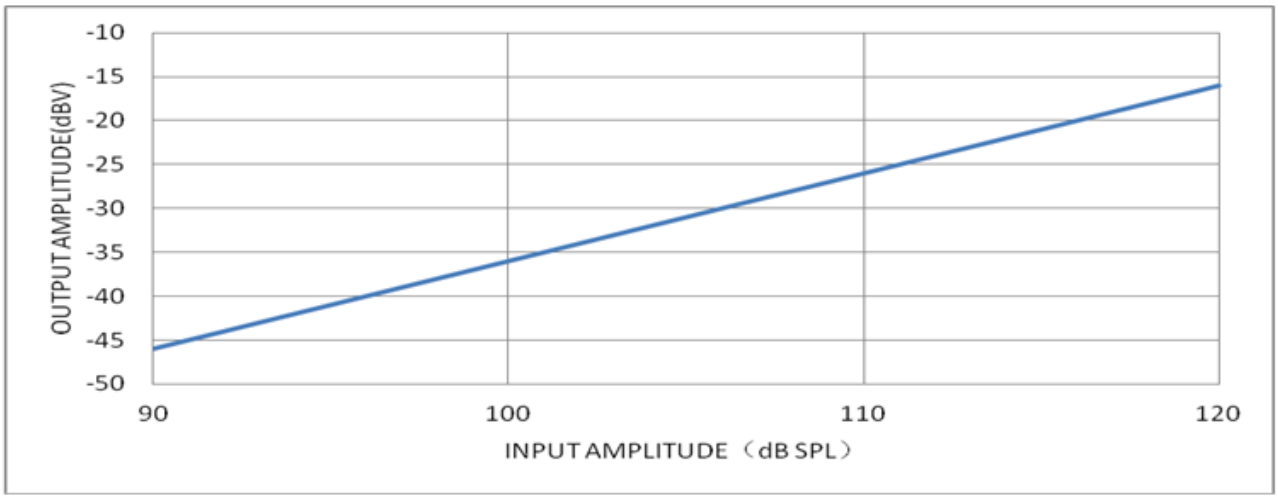

Ultrasonic Frequency Response (Sensitivity normalized to 0 dB)

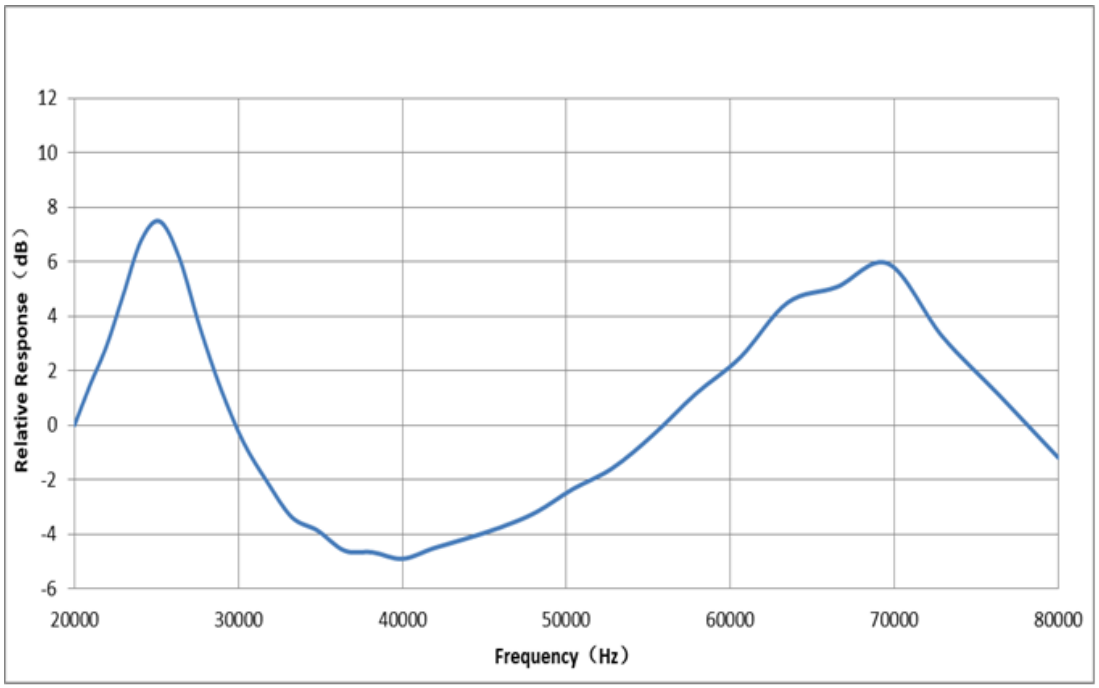

PUI Audio, Inc., 3541 Stop Eight Road, Dayton, OH 45414
Tel: (937) 415-5901 Fax: (937) 415-5925

This document contains data proprietary to PUI Audio Inc. Any use or reproduction, in any form, without prior written permission of PUI Audio Inc. is prohibited.
©2019, PUI Audio Inc.

Recommended Reflow Soldering Procedure

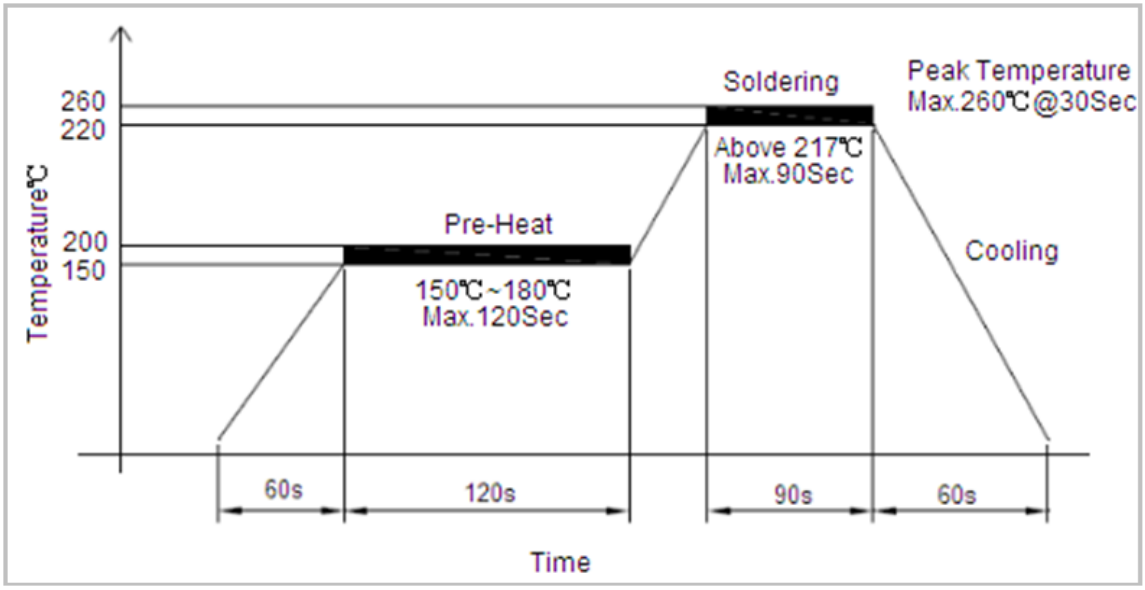

Important Notes to minimize device damage:

1. Do not boards wash or clean after the reflow process.
2. Do not apply over 0.3Mpa of air pressure into the port hole.
3. Do not expose to ultrasonic processing or cleaning.
4. Do not pull a vacuum over port hole of the microphone.

Reliability Testing

Type of Test	Test Specifications
Simulated Reflow (Without Solder)	Samples for qualification testing require 3 passes 260±5 °C reflow solder profiles. 2 hours of setting time is required between each reflow profile test.
Static Humidity	Precondition at +25°C for 1 hour. Expose to +85°C with 85% relative humidity for 1000 hours. Finally, dry at room ambient for 3±1 hour before taking final measurement.
Temperature Shock	Each cycle shall consist of 30 minutes at -40°C, 30 minutes at +125°C with 5 minutes transition time. Test duration is for 30 cycles, starting from cold to hot temperature.
ESD Sensitivity	Perform ESD sensitivity threshold measurements for each contact according to MIL-STD-883G, Method 3015.7 for Human Body Model. Identify the ESD threshold levels indicating passage of 8000V Human Body Model.
Vibration Test	Vibrate randomly along three perpendicular directions for 30 minutes in each direction, 4 cycles from 20~2000 Hz with a peak acceleration of 20 Gs.
Shock Test	Subject samples to half-sine shock pulses (3000±15% Gs for 0.3ms) in each direction, for a total of 18 shocks.
Drop Test	Drop samples from 1.5m height onto a steel surface, total 18 times and inspected for mechanical damage.
Operation Life	Subject samples to +125°C for 168 hours under full maximum rated voltage.

Microphone frequency response and sensitivity shall not deviate more than ±3 dB.

This document contains data proprietary to PUI Audio Inc. Any use or reproduction, in any form, without prior written permission of PUI Audio Inc. is prohibited.
©2019, PUI Audio Inc.

Dimensions

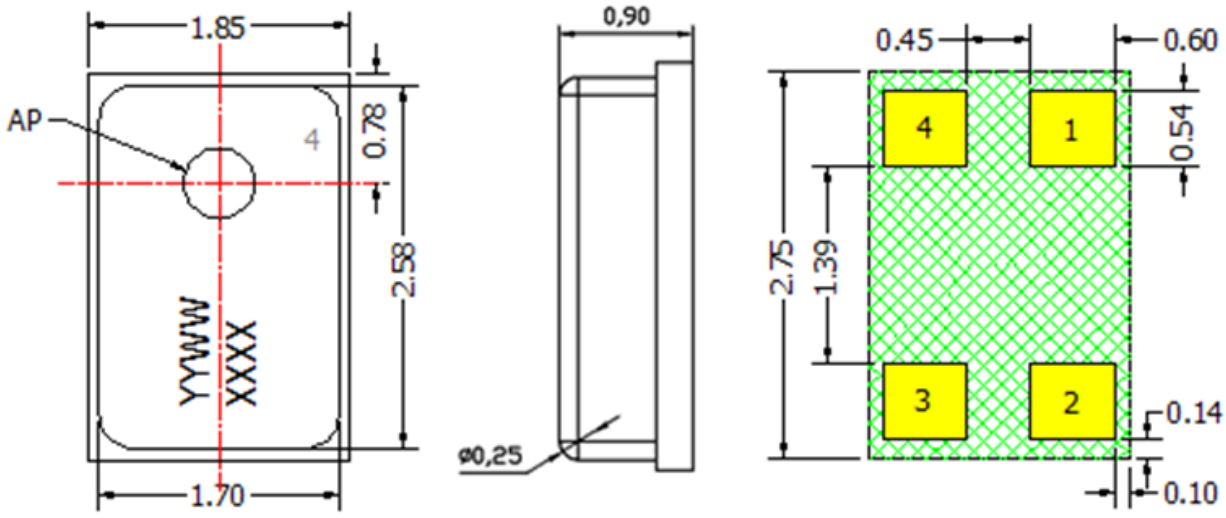

Top View Side View Bottom View

Data Code	
YYWW	YY:Year WW: Work Week
XXXX	XXXX: Lot No.

Item	Dimension	Tolerance (+/-)	Units
Length(L)	2.75	0.10	mm
Width(W)	1.85	0.10	mm
Height(H)	0.9	0.10	mm
Acoustic Port (AP)	Ø0.5	0.05	mm

Pin #	Pin Name	Type	Description
1	DATA	Signal	Output Signal
2	GND	Ground	Ground
3	GND	Ground	Ground
4	V_{DD}	Power	Power Supply

Notes:
All dimensions are in millimeter (mm).
Tolerance±0.15mm unless otherwise specified.

PUI Audio, Inc., 3541 Stop Eight Road, Dayton, OH 45414
Tel: (937) 415-5901 Fax: (937) 415-5925

This document contains data proprietary to PUI Audio Inc. Any use or reproduction, in any form, without prior written permission of PUI Audio Inc. is prohibited.
©2019, PUI Audio Inc.

Suggested Pickup Tool Location and Land Pattern*

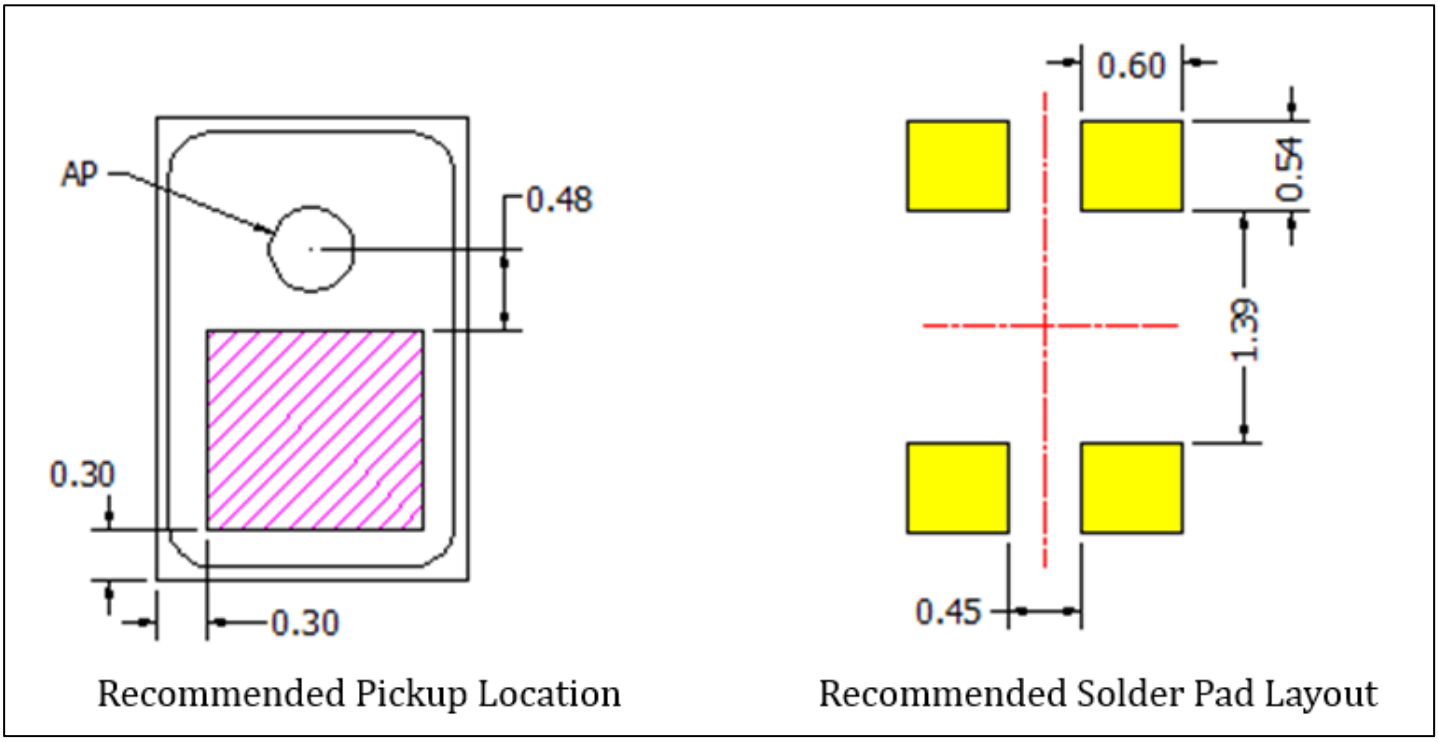

Recommended Pickup Location

Recommended Solder Pad Layout

*This land pattern is advisory only and its use or adaptation is entirely voluntary. PUI Audio disclaims all liability of any kind associated with the use, application, or adaptation of this land pattern.

PUI Audio, Inc., 3541 Stop Eight Road, Dayton, OH 45414
Tel: (937) 415-5901 Fax: (937) 415-5925

This document contains data proprietary to PUI Audio Inc. Any use or reproduction, in any form, without prior written permission of PUI Audio Inc. is prohibited.
©2019, PUI Audio Inc.

Packaging

Tape Specification

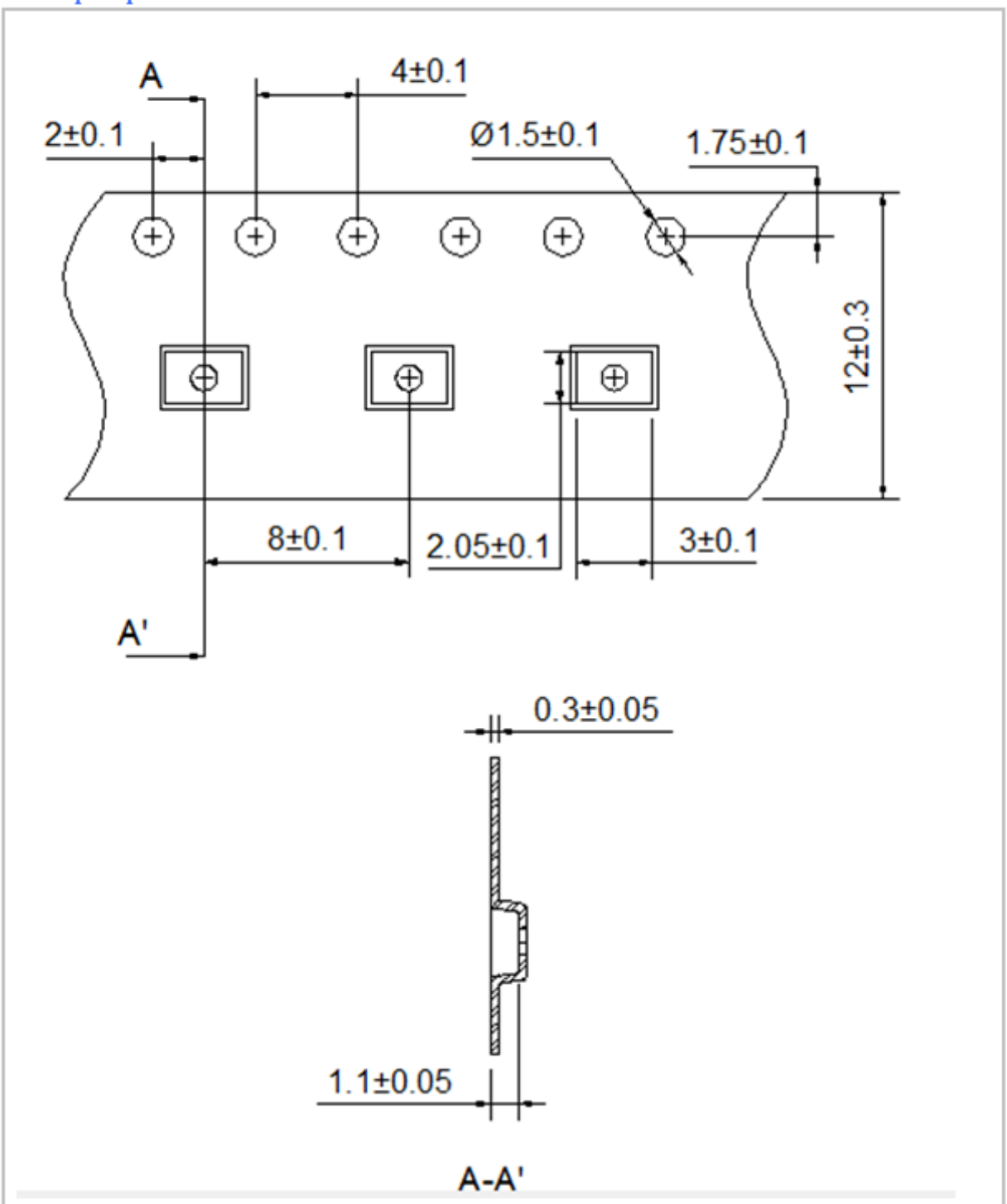

Notes:
All dimensions are in millimeter (mm).
Tolerance±0.15mm unless otherwise specified.

This document contains data proprietary to PUI Audio Inc. Any use or reproduction, in any form, without prior written permission of PUI Audio Inc. is prohibited.
©2019, PUI Audio Inc.

Packaging (continued)

Reel Specification

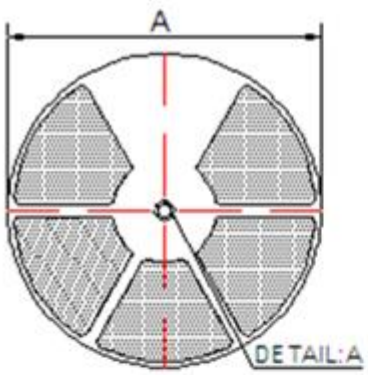

Top View

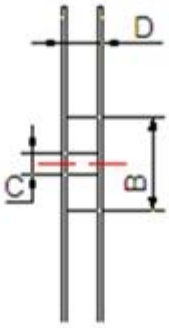

Side View

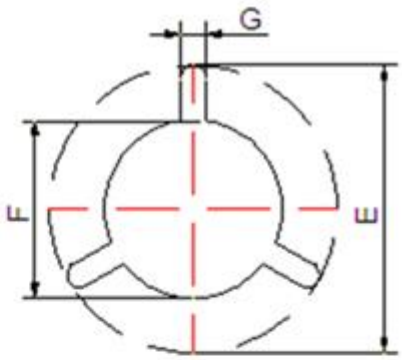

DETAIL:A

7" Reel

Description	Symbol	Dimension (mm)		
		Minimum	Nominal	Maximum
Reel Diameter	A	-	180	-
Hub Diameter	B	58	60	62
Hub Hole Diameter	C	12.8	13	13.5
Reel Width (Measured at hub)	D	-	16	16.4
Arbor Hole	E	20.2	-	-
Arbor Hw in mm Diameter	F	12.8	13.0	13.5
Arbor Slot Width	G	1.5	-	-

Notes:
All dimensions are in millimeter (mm).

This document contains data proprietary to PUI Audio Inc. Any use or reproduction, in any form, without prior written permission of PUI Audio Inc. is prohibited.
©2019, PUI Audio Inc.

Packaging (continued)

Packing Quantity

7" Reel Packing

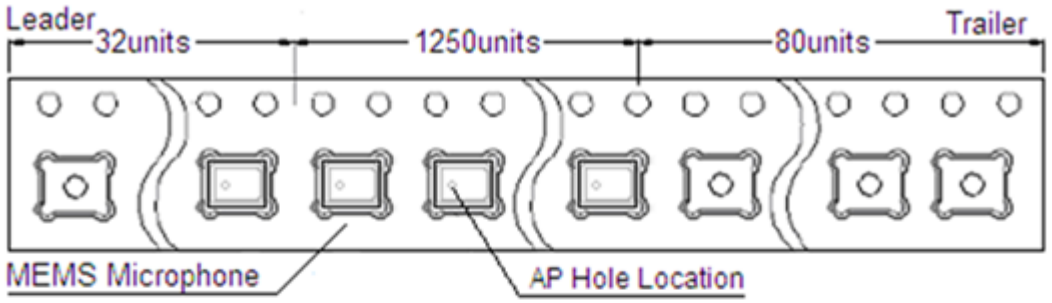

Packing Information

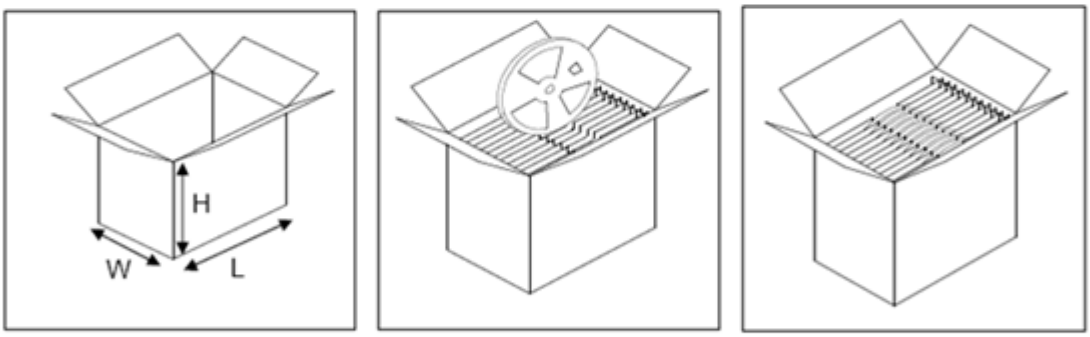

Tape & Reel 7"

Qty/reel	Weight/reel	Reel/Carton	Qty/carton	Weight full	Dimension carton Box	Storage
Pcs	Kg	Nos	Nos	Load(kg)	(L x W x H) mm	Temp
1250	0.25	4	5000	~3.00	272 x 159 x 236	-10°C~50 °C

PUI Audio, Inc., 3541 Stop Eight Road, Dayton, OH 45414
Tel: (937) 415-5901 Fax: (937) 415-5925

This document contains data proprietary to PUI Audio Inc. Any use or reproduction, in any form, without prior written permission of PUI Audio Inc. is prohibited.
©2019, PUI Audio Inc.

Specifications Revisions

Revision	Description	Date
-	Released from Engineering	10/31/2019
A	Added Ultrasonic Response	5/19/2020

Note:
1. Unless otherwise specified:
   A. All dimensions are in millimeters.
   B. Default tolerances are ±0.5mm and angles are ±3°.
2. Specifications subject to change or withdrawal without notice.

PUI Audio, Inc., 3541 Stop Eight Road, Dayton, OH 45414
Tel: (937) 415-5901 Fax: (937) 415-5925