THIS DOCUMENT CONTAINS DATA PROPRIETARY TO PROJECTS UNLIMITED, INC. ANY USE OR REPRODUCTION, IN ANY FORM, WITHOUT PRIOR WRITTEN PERMISSION OF PROJECTS UNLIMITED, INC. IS PROHIBITED.
© 2005, Projects Unlimited Inc.

REVISIONS			
LTR	DESCRIPTION	DATE	APPROVED
–	RELEASED FROM ENGINEERING	7/30/15	

SPECIFICATIONS

PARAMETERS	VALUES	UNITS
RATED INPUT POWER	0.2	W
MAX INPUT POWER	0.3	W
IMPEDANCE	16±15%	OHM
OUTPUT SPL @ 0.1W/0.1M (AT 0.8, 1.0, 1.2, 1.5 kHz)	85±3	dBA
DISTORTION (MAX.)	5%	–
RESONANT FREQUENCY	1100±20%	Hz
FREQUENCY RANGE	Fo ~ 5,000	Hz
HOUSING MATERIAL	METAL	–
CONE MATERIAL	MYLAR	–
MAGNET MATERIAL	NdFEB	–
OPERATING TEMPERATURE	–30 ~ +70	℃
WEIGHT	0.8	grams

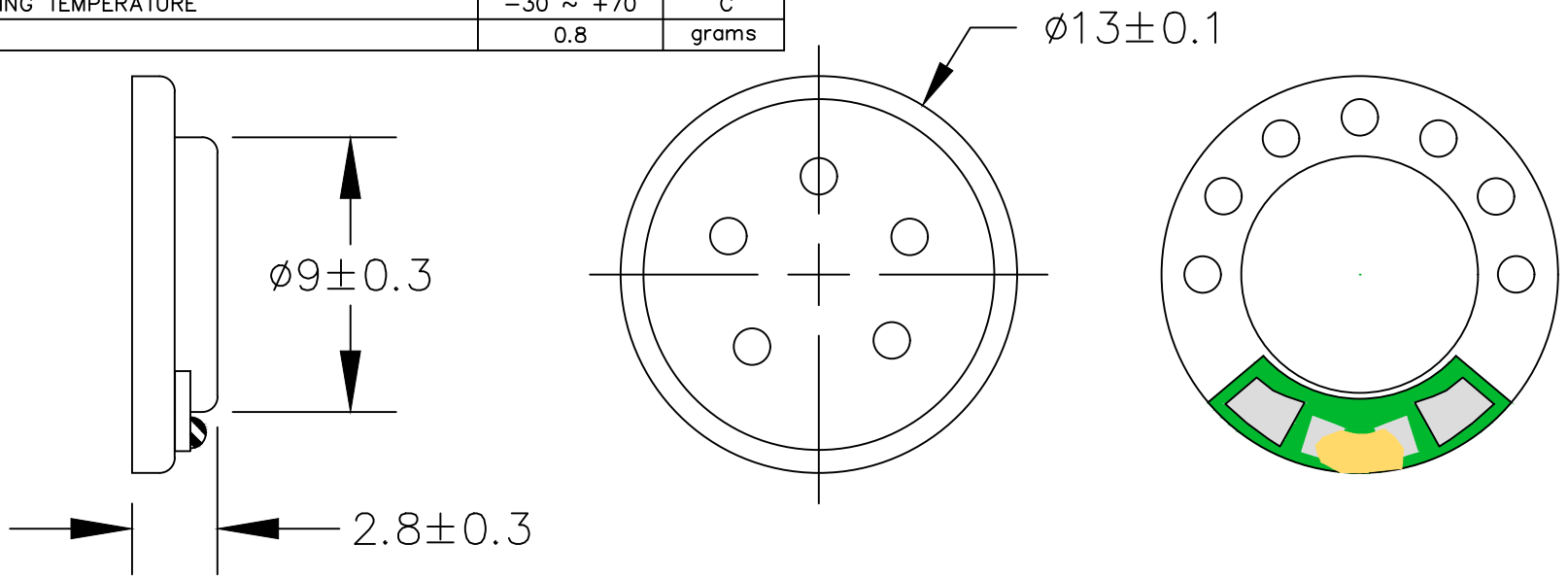

NOTES:

1. ALL DIMENSIONS ARE IN MILLIMETERS.
2. SPECIFICATION SUBJECT TO CHANGE OR WITHDRAWAL WITHOUT NOTICE.
3. THIS PART IS RoHS 2011/65/EU COMPLIANT.

BASE SPEAKER: AS01308MR–2–R

FILE NAME: AS01316MR–R.DWG

UNLESS OTHERWISE SPECIFIED:
ALL PURCHASES ARE SUBJECT TO THE PUI AUDIO TERMS AND CONDITIONS SALE FOUND AT http://www.puiaudio.com/pdf/terms_conditions.pdf (paper copy available upon request).

DIMENSIONS ARE IN MILLIMETERS,TOLERANCES ARE ±0.5 AND ANGLES ARE ±3°.

APPROVALS		DATE
DRAWN	M.L.	7/15
CHECKED	M.L.	7/15
APPROVED	B.R.	7/15

pui audio inc
a projects unlimited company

3541 Stop Eight Road
Dayton, Ohio 45414

SPEAKER

SIZE: A

DRAWING NO.: AS01316MR–R

SCALE: N.T.S.

SHEET 1 OF 1