THIS DOCUMENT CONTAINS DATA PROPRIETARY TO PROJECTS UNLIMITED, INC. ANY USE OR REPRODUCTION, IN ANY FORM, WITHOUT PRIOR WRITTEN PERMISSION OF PROJECTS UNLIMITED, INC. IS PROHIBITED.
© 2005, Projects Unlimited Inc.

SPECIFICATIONS

PARAMETERS	VALUES	UNITS
RATED INPUT POWER	.94	W
MAX INPUT POWER	1.2	W
IMPEDANCE	6±20%	OHM
OUTPUT SPL @ 2.37Vrms/0.1M (2.0 kHz AVG., 1cc box)	91±3	dBA
DISTORTION (MAX.)	10%	–
RESONANT FREQUENCY	850±20%	Hz
FREQUENCY RANGE	500 ~ 20,000	Hz
HOUSING MATERIAL	PPA	–
CONE MATERIAL	PEEK	–
MAGNET MATERIAL	NdFeB	–
OPERATING TEMPERATURE	−20 ~ +60	℃
WEIGHT	1.2	grams

REVISIONS			
LTR	DESCRIPTION	DATE	APPROVED
–	RELEASED FROM ENGINEERING	3/26/18	

*land pattern in red

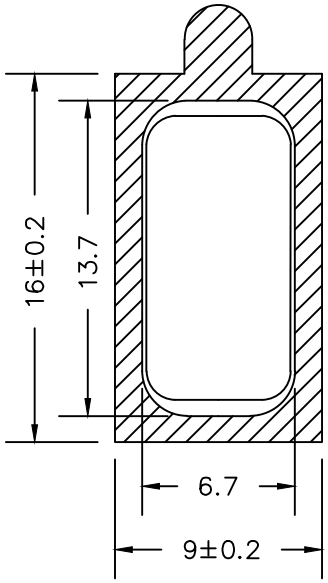

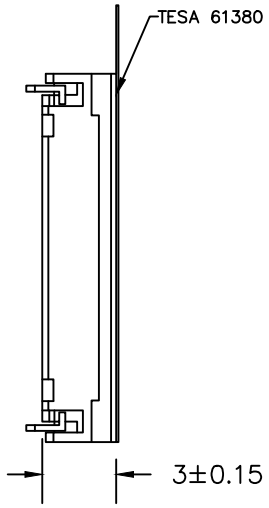

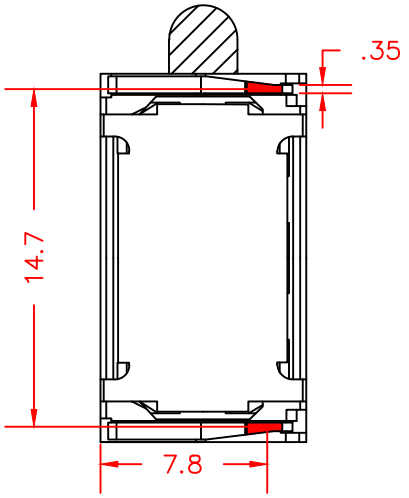

NOTES:

1. ALL DIMENSIONS ARE IN MILLIMETERS.
2. SPECIFICATION SUBJECT TO CHANGE OR WITHDRAWAL WITHOUT NOTICE.
3. 2-SIDED ADHESIVE: TESA 61380
4. THIS PART IS RoHS 2011/65/EU COMPLIANT.
5. THE FACE OF THIS PART CONFORMS TO IP67 WATERPROOF STANDARDS.

BASE SPEAKER: AS01606MS-SC16-WP-R

FILE NAME: AS01606MS-SC16-WP-2-R.DWG

UNLESS OTHERWISE SPECIFIED:
ALL PURCHASES ARE SUBJECT TO THE PUI AUDIO TERMS AND CONDITIONS SALE FOUND AT http://www.puiaudio.com/pdf/terms_conditions.pdf (paper copy available upon request).

DIMENSIONS ARE IN MILLIMETERS, TOLERANCES ARE ±0.5 AND ANGLES ARE ±3°.

APPROVALS		DATE
DRAWN	M.L.	3/18
CHECKED	M.L.	3/18
APPROVED	B.R.	3/18

pui audio inc
a projects unlimited company

3541 Stop Eight Road
Dayton, Ohio 45414

SPEAKER

SIZE A | DRAWING NO. AS01606MS-SC16-WP-2-R

SCALE: N.T.S. | SHEET 1 OF 1