This document contains data proprietary to PUI Audio Inc. Any use or reproduction, in any form, without prior written permission of PUI Audio Inc. is prohibited.
©2017, PUI Audio Inc.



Data Sheet	AS01808PR-N50-R

Introducing the N50 Mini Speaker Series from PUI Audio. High-grade neodymium magnetic motors are employed in each N50 Series speaker to create the highest output possible, in the smallest form factor.

The 18mm diameter **AS01808PR-N50-R** features a paper cone and inverted foam surround for warm, classic tone and high power handling. Add high fidelity sound to your product without sacrificing space!

Features:

- Paper cone with inverted foam surround
- High 78 dB output at 1W/50cm
- N50 neodymium motor
- Only 5.2mm thick
- 1.2mm of excursion

Specifications

Parameters	**Values**	**Units**
Rated Input Power	2	Watts
Max Input Power	2.8	Watts
Impedance	8 ± 15%	Ohms
Sensitivity (SPL @ 1W/50cm) (800, 1000, 1200, and 1500 Hz)	78 ± 3	dBA
Distortion (Max @ 2W, 1 kHz)	<5%	
Resonant Frequency	500 ± 20%	Hz
Frequency Range	300 ~ 20,000	Hz
Housing Material	ABS	
Magnet Material	NdFeB	
Weight	4.8	Grams

PUI Audio, Inc. A Projects Unlimited Company, 3541 Stop Eight Road, Dayton, OH 45414
Tel: (937) 415-5901 Fax: (937) 415-5925

This document contains data proprietary to PUI Audio Inc. Any use or reproduction, in any form, without prior written permission of PUI Audio Inc. is prohibited.
©2017, PUI Audio Inc.

Specifications (continued)

Buzz, Rattle, etc.	Should not be audible with 4Vpk sine wave from 500 Hz to 10 kHz	
Polarity	When positive voltage is applied to the positive terminal, the diaphragm will move outward	
Operating Temperature	-20 ~ +60	°C
Storage Temperature	-30 ~ +70	°C

Measurement Method

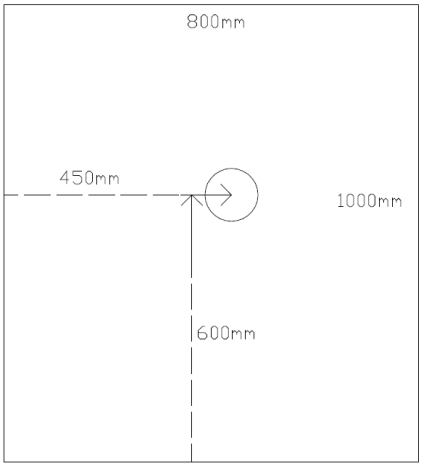

Test Baffle (speaker mounted in circle)

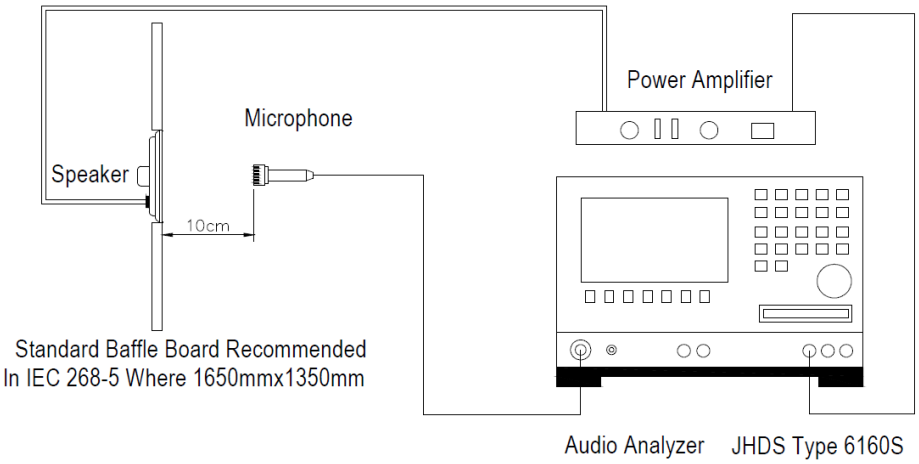

This document contains data proprietary to PUI Audio Inc. Any use or reproduction, in any form, without prior written permission of PUI Audio Inc. is prohibited.
©2017, PUI Audio Inc.

Frequency Response (measured at 50cm with 1W input power)

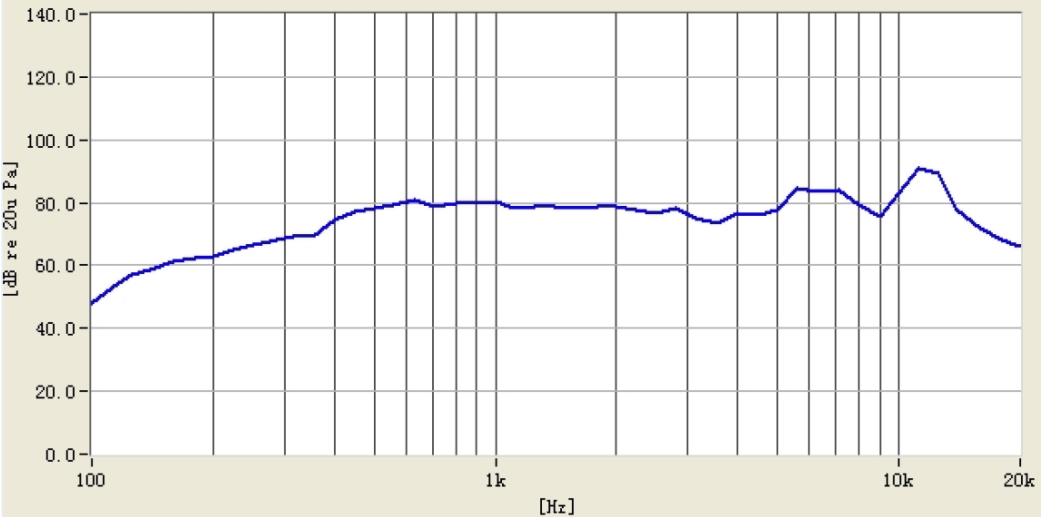

Reliability Testing

Type of Test	Test Specifications
High Temperature Test	96 hours at +70°C ± 3°C followed by six hours in normal room temperature
Low Temperature Test	96 hours at -30°C ± 3°C followed by six hours in normal room temperature
Humidity Test	96 hours at +30°C ± 3°C with relative humidity at 92% to 95% followed by 3 hours in normal room temperature
Temperature Cycle Testing	The part shall be subjected to 5 cycles using the following procedure: 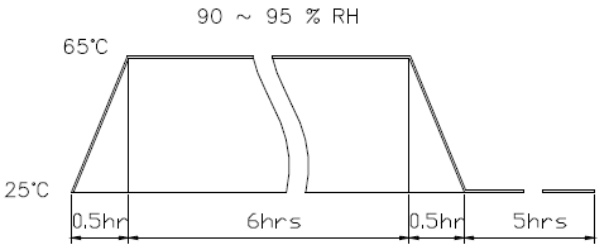
Vibration Test	10 to 55 to 10 Hz cycles, 15 minutes per cycle. 2 hours in each axis X, Y, and Z.
Drop Test	Drop the speakers onto a 40mm thick board 10 times from a height of 75cm.
Load Test	Pink noise is applied at the speakers rated power for 96 hours at room temperature

After each test, the speaker's SPL shall be ±3 dB of the original SPL

This document contains data proprietary to PUI Audio Inc. Any use or reproduction, in any form, without prior written permission of PUI Audio Inc. is prohibited.
©2017, PUI Audio Inc.

Dimensions

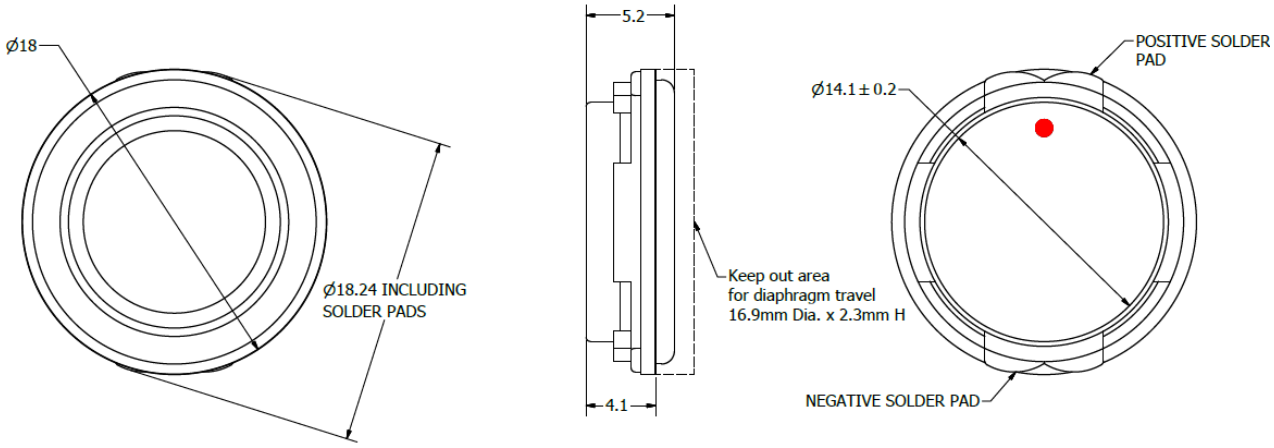

Packaging

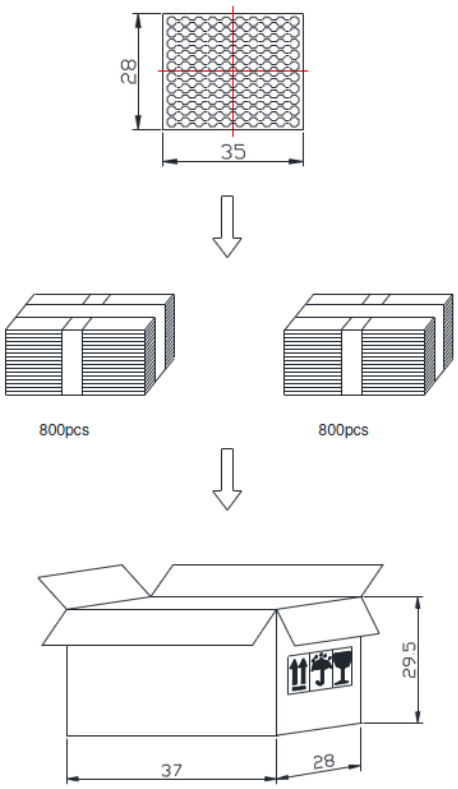

100 pcs per tray
8 trays for unit，2 units per carton
Total:1600 pcs per box
Size:37*28*29.5cm

PUI Audio, Inc. A Projects Unlimited Company, 3541 Stop Eight Road, Dayton, OH 45414
Tel: (937) 415-5901 Fax: (937) 415-5925

This document contains data proprietary to PUI Audio Inc. Any use or reproduction, in any form, without prior written permission of PUI Audio Inc. is prohibited.
©2017, PUI Audio Inc.

Specifications Revisions

Revision	Description	Date
-	Released from Engineering	5/11/2017
A	Added packaging specifications	7/13/2017

Note:

1. Unless otherwise specified:
   A. All dimensions are in millimeters.
   B. Default tolerances are ±0.5mm and angles are ±3°.
2. Specifications subject to change or withdrawal without notice.
3. This part is RoHS 2011/65/EU Compliant.

PUI Audio, Inc. A Projects Unlimited Company, 3541 Stop Eight Road, Dayton, OH 45414
Tel: (937) 415-5901 Fax: (937) 415-5925