This document contains data proprietary to PUI Audio Inc. Any use or reproduction, in any form, without prior written permission of PUI Audio Inc. is prohibited.
©2024, PUI Audio Inc.

PUIaudio



| Data Sheet | AS02008MR-HT-WP |
|---|---|

The **AS02008MR-HT-WP** is designed for applications such as hand-held devices, portable devices, and devices that value compact design.

## Features:

- 83dBSPL: $P_{DRIVE}$ = 1.0W, distance = 0.1m
- 1.2W continuous dissipation
- 1000Hz free-air resonance
- Waterproof
- Operational in ambient temperatures as high as 85°C
- 20.0mm diameter x 3.9mm dimensions

## Specifications

(Specifications measured with following conditions: ambient temperature; 15°C ≤ $T_A$ ≤_35°C, relative humidity; 25% ≤ $RH_A$ ≤ 75%, according to standard GB/T9396-1996, unless otherwise stated. Judgement Condition: ambient temperature; 20 ±2°C; relative humidity; 63% ≤ $RH_A$ ≤ 67%. Product shelf life valid for 12 months.

| Parameters | Values | Units |
|---|---|---|
| Rated Input Power | 1.2 | Watts |
| Maximum Input Power | 1.5 | Watts |
| Impedance | 8 ±15% | Ohms |
| Sensitivity (SPL)<br>$P_{DRIVE}$ = 1.0W, distance = 0.1m<br>f = ave. 0.8kHz, 1.0kHz, 1.2kHz, 1.5kHz | 80 ±3 | dB |
| Resonant Frequency ($f_0$) | 1000 ±20% | Hz |
| Frequency Range (-10 dB) | 1000 ≤ f ≤ 20,000 | Hz |
| Total Harmonic Distortion (THD)<br>f = 1kHz, $P_{DRIVE}$ = 1.0W | ≤ 5 | % |
| Frame Material | Iron | - |
| Magnet Material | NdFeB | - |
| Diaphragm Material | PEN | - |
| Weight | 2.5 | gm |
| Ingress Protection Rating | IPx5 | - |
| Buzz, Rattle, etc. | Not audible with $P_{DRIVE}$ = 1.2W, sine wave | - |
| Polarity | Applying positive dc current to "+" terminal moves diaphragm forward | - |
| Operating Temperature | -25 ≤ $T_O$ ≤ 50 | °C |
| Storage Temperature | -40 ≤ $T_S$ ≤ 85 | °C |
| Environmental Compliances | ROHS/REACH | - |

This document contains data proprietary to PUI Audio Inc. Any use or reproduction, in any form, without prior written permission of PUI Audio Inc. is prohibited.
©2024, PUI Audio Inc.

## Measurement Method (1W input power with microphone spaced at 50cm)

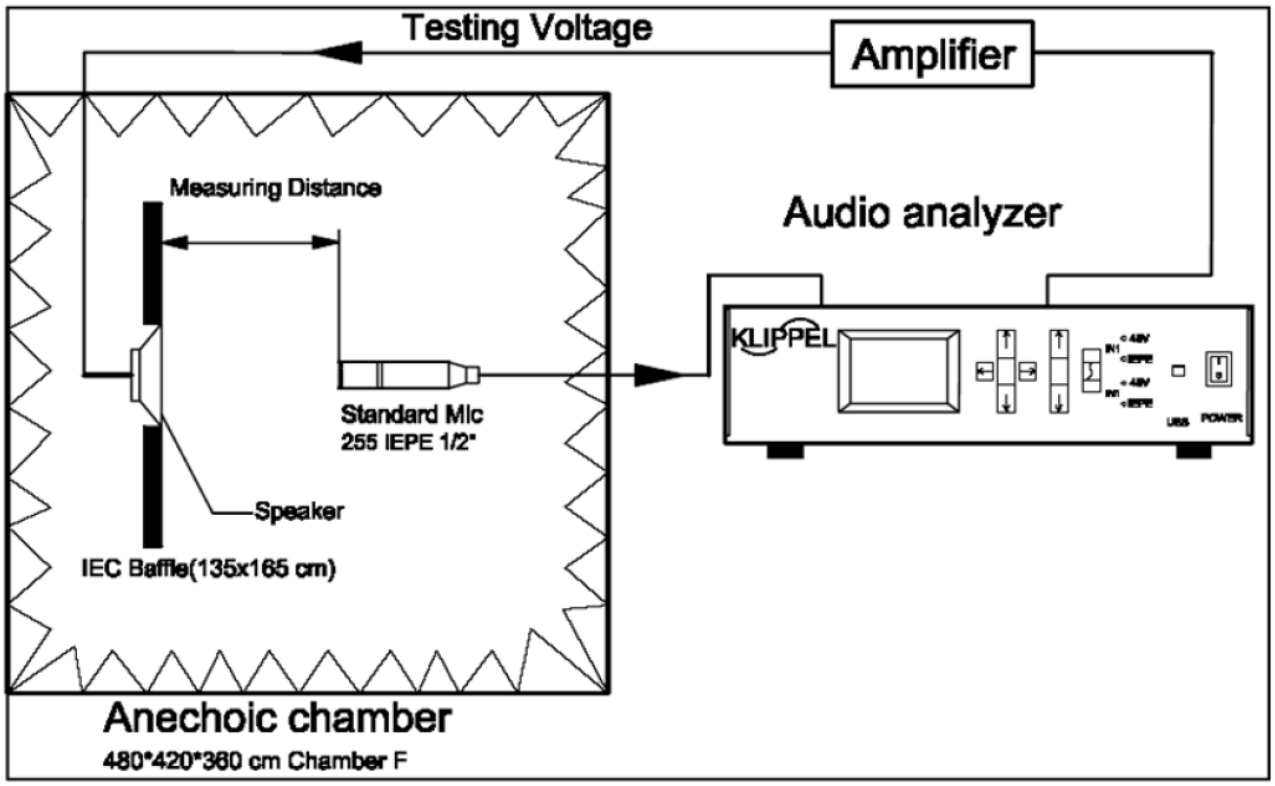


## Typical Frequency Response ($P_{DRIVE}$ = 1W, distance = 0.1m)

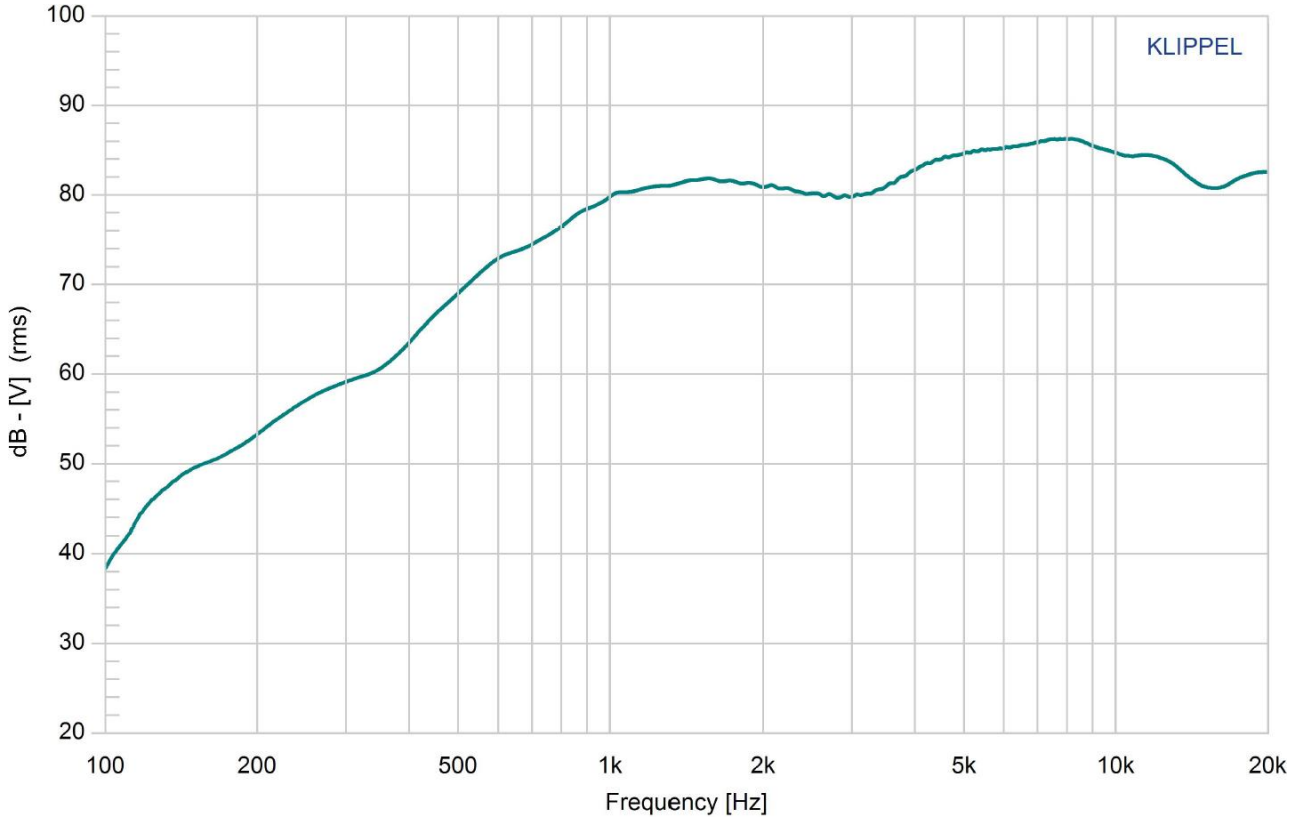

This document contains data proprietary to PUI Audio Inc. Any use or reproduction, in any form, without prior written permission of PUI Audio Inc. is prohibited.
©2024, PUI Audio Inc.

## Typical THD vs. Frequency ($P_{DRIVE}$ = 1W)

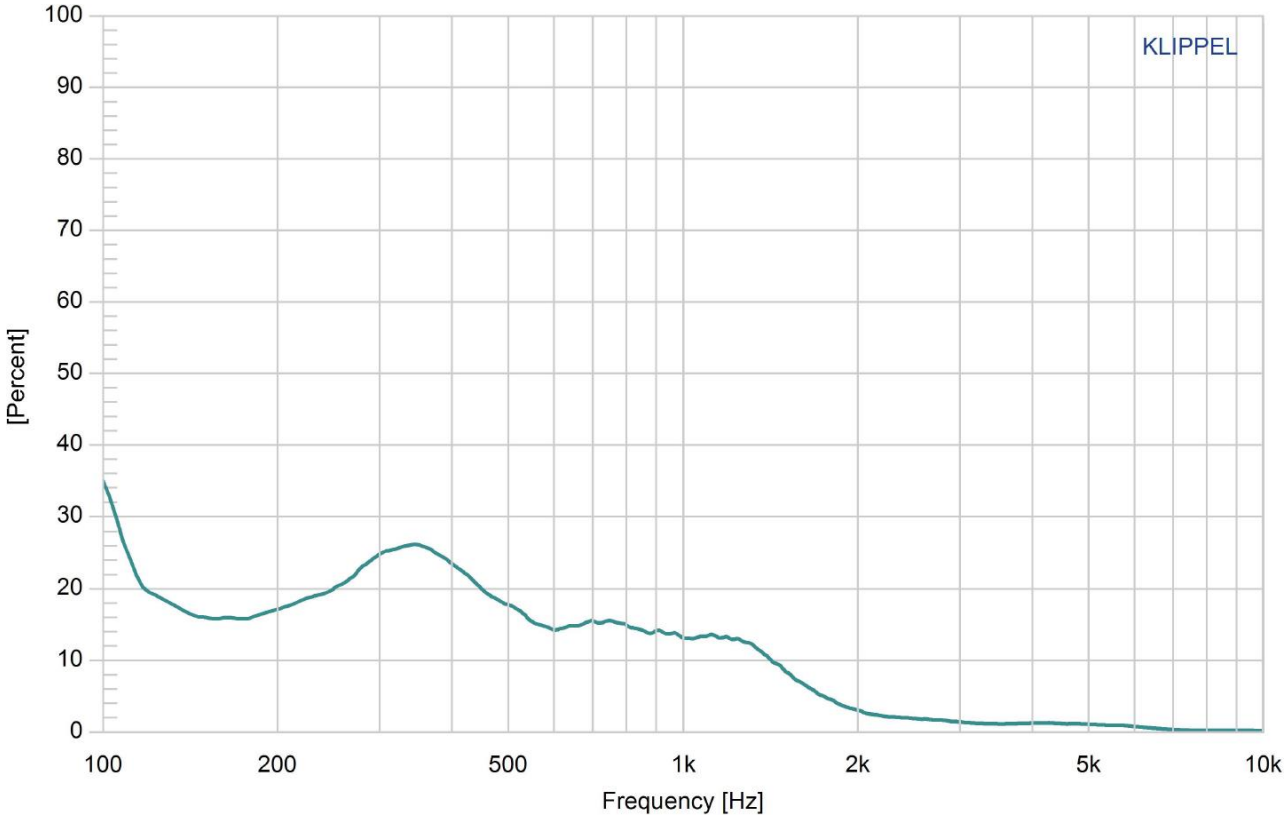


## Typical Impedance Response

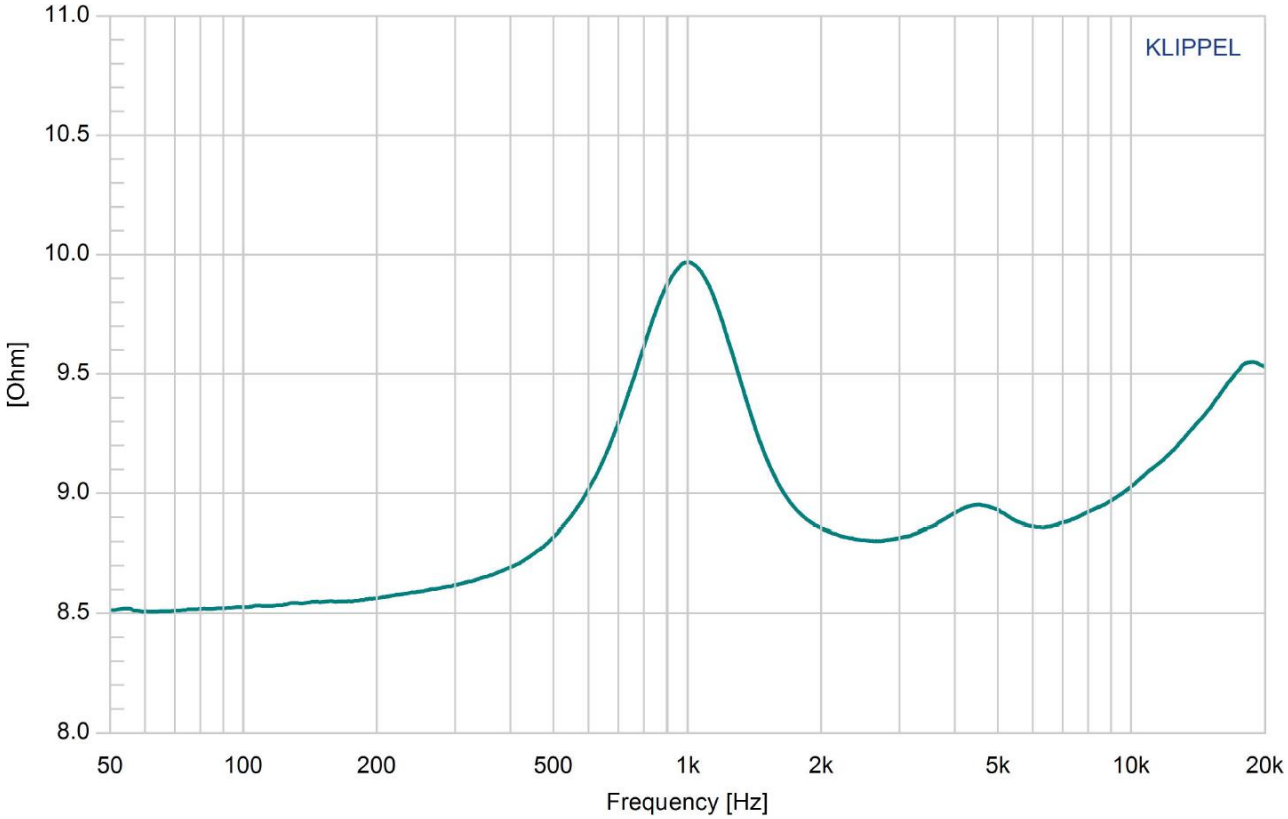

This document contains data proprietary to PUI Audio Inc. Any use or reproduction, in any form, without prior written permission of PUI Audio Inc. is prohibited.
©2024, PUI Audio Inc.

## Reliability Testing

| Type of Test | Test Specifications | Judgement |
|---|---|---|
| High Temperature Test GB2423.2-81 | 96 hours at +85°C ± 2°C followed by one hour in normal room temperature | SPL shall not deviate by ±3dB. Resonant frequency shall not deviate by ±50Hz. (compared with pre-test measurement) |
| Low Temperature Test GB2423.1-81 | 96 hours at -40°C ± 2°C followed by one hour in normal room temperature | |
| Humidity Test GB5170.18-87 | 96 hours at +40°C ± 2°C with relative humidity between 90% and 95% followed by 6 hours in normal room temperature | |
| Temperature Cycle Testing GB5170.18-87 | 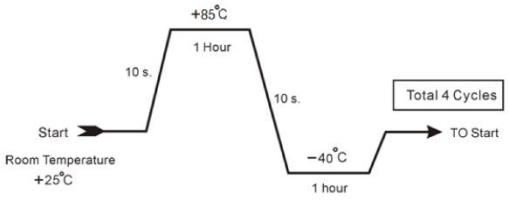  | SPL shall not deviate by ±4dB. Resonant frequency shall not deviate by ±80Hz. (compared with pre-test measurement) |
| Vibration Test GB11606.8-89 | Frequency 30±15 Hz, Amplitude 1.5 mm for 3 Hours | SPL shall not deviate by ±3dB. (compared with pre-test measurement) |
| Drop Test GB2423.8-81 | 75 cm free falling on concrete floor, 10 times. | |
| Load Test GB/T12060.5-2011 | Speaker should not fail after applying 20Hz ~ 20kHz pink noise with HPF rated power input (RMS), 96 hours. | |

## Dimensions

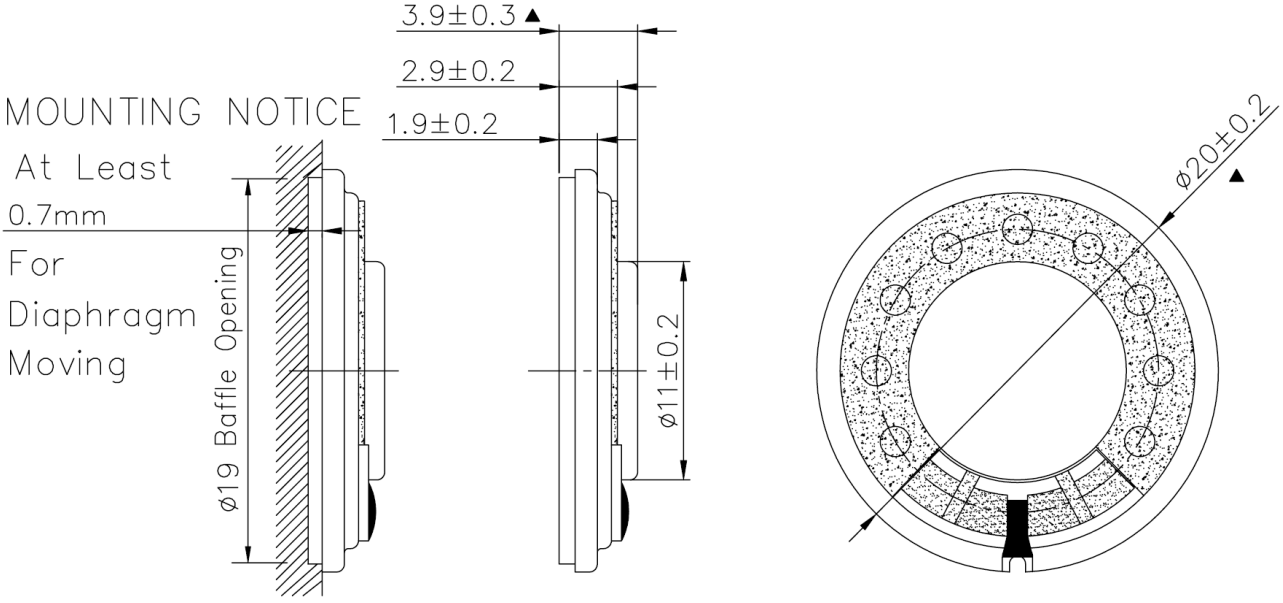

This document contains data proprietary to PUI Audio Inc. Any use or reproduction, in any form, without prior written permission of PUI Audio Inc. is prohibited.
©2024, PUI Audio Inc.

## Packaging

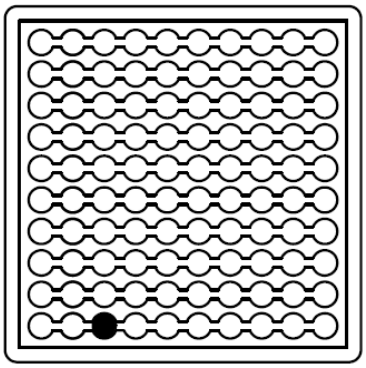

NOTE
100 PCS per Layer
Total 30 Layer per box
Total 3000 PCS per box
31.0*31.0*36.0 cm
G.W.:8.3KG
HF+ROHS 2

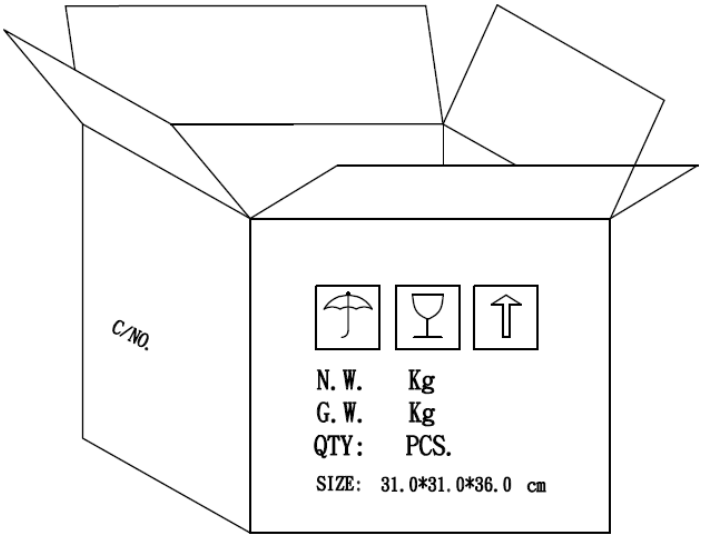


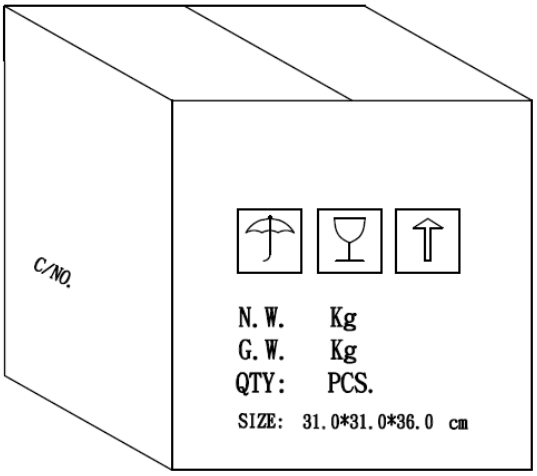

This document contains data proprietary to PUI Audio Inc. Any use or reproduction, in any form, without prior written permission of PUI Audio Inc. is prohibited.
©2024, PUI Audio Inc.

## Measurement & Standard Reference

Abstract from GB/T 9396-1996 and IEC 268-5:1989: methods of measurement for main characteristics of loudspeakers.

**5.1 Rated sine voltage.**

A sinusoidal signal voltage specified by the manufacturer which makes the speaker work continuously in the rated frequency range, without causing electrical or mechanical damage to the speaker. The continuous voltage time is 1 hour.

**5.2 Rated sine power.**

The rated sine power corresponding with the rated sine voltage defined by: $U_S^2/R$, where $U_s$ indicates the rated sin voltage and R indicates the rated impedance of the speaker.

**5.3 Rated noise power.**

The rated sine power corresponding with the rated sine voltage defined by: $U_n^2/R$, where $U_n$ indicates the rated sin voltage and R indicates the rated impedance of the speaker.

**Specifications Revisions**

| Revision | Description | Date | Approved |
|---|---|---|---|
| A | Datasheet released from Engineering | 3/21/2024 | KH |

Note:

1. Unless otherwise specified:
   A. All dimensions are in millimeters.
   B. Default tolerances are ±0.5mm and angles are ±3°, unless otherwise specified.
2. Specifications subject to change or withdrawal without notice.