This document contains data proprietary to PUI Audio Inc. Any use or reproduction, in any form, without prior written permission of PUI Audio Inc. is prohibited.
©2024, PUI Audio Inc.

PUIaudio



Data Sheet AS03504AR-T

The **AS03504AR-T** is designed for applications that require robust low-frequency response and low THD in compact designs.

Features:

- 83dBSPL: P_{DRIVE} = 1.0W, distance = 0.5m
- 1.0W continuous dissipation
- 220Hz free-air resonance
- 35.3mm diameter x 16.7mm dimensions

Specifications

(Specifications measured with following conditions: ambient temperature; 15°C ≤ T_A ≤_35°C, relative humidity; 25% ≤ RH_A ≤ 75%, according to standard GB/T9396-1996, unless otherwise stated. Judgement Condition: ambient temperature; 20 ±2°C; relative humidity; 63% ≤ RH_A ≤ 67%. Product shelf life valid for 12 months.

Parameters	Values	Units
Rated Input Power	4	Watts
Maximum Input Power	6	Watts
Impedance	4 ±15%	Ohms
Sensitivity (SPL) P_{DRIVE} = 1.0W, distance = 0.5m f = ave. 0.8kHz, 1.0kHz, 1.2kHz, 1.5kHz	83 ±3	dB
Resonant Frequency (f_O)	220 ±20%	Hz
Frequency Range (-10 dB)	$f_0 \leq f \leq 20{,}000$	Hz
Total Harmonic Distortion (THD) f = 1kHz, P_{DRIVE} = 1.0W	≤ 5	%
Frame Material	ABS	-
Magnet Material	NdFeB	-
Diaphragm Material	NBR + AL	-
Weight	35.0	gm
Buzz, Rattle, etc.	Not audible with P_{DRIVE} = 4.0W, sine wave	-
Polarity	Applying positive dc current to "+" terminal moves diaphragm forward	-
Operating Temperature	$-25 \leq T_O \leq 60$	°C
Storage Temperature	$-25 \leq T_S \leq 60$	°C
Environmental Compliances	RoHS/REACH	

This document contains data proprietary to PUI Audio Inc. Any use or reproduction, in any form, without prior written permission of PUI Audio Inc. is prohibited.
©2024, PUI Audio Inc.

Measurement Method (measured with P_{DRIVE} = 1.0W, distance = 0.5m)

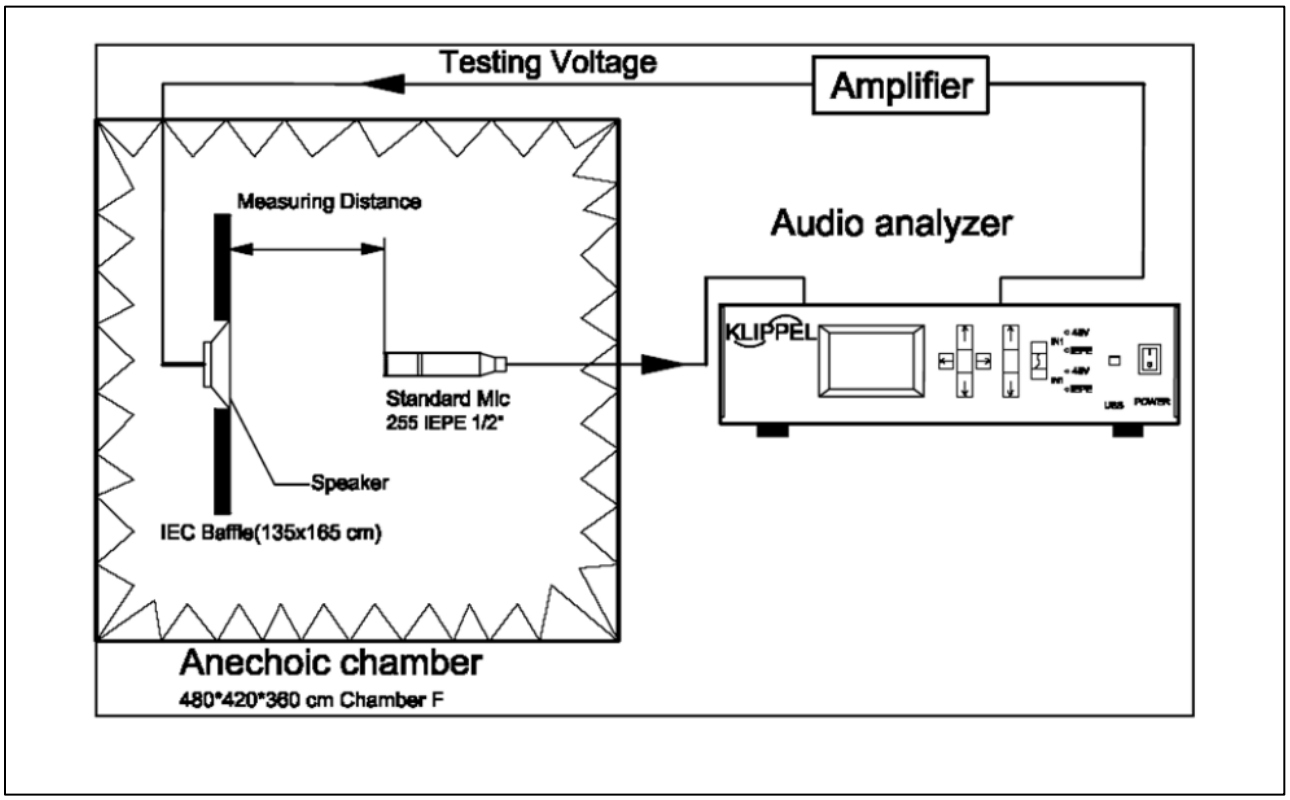

Typical Frequency Response (P_{DRIVE} = 1W, distance = 0.5m)

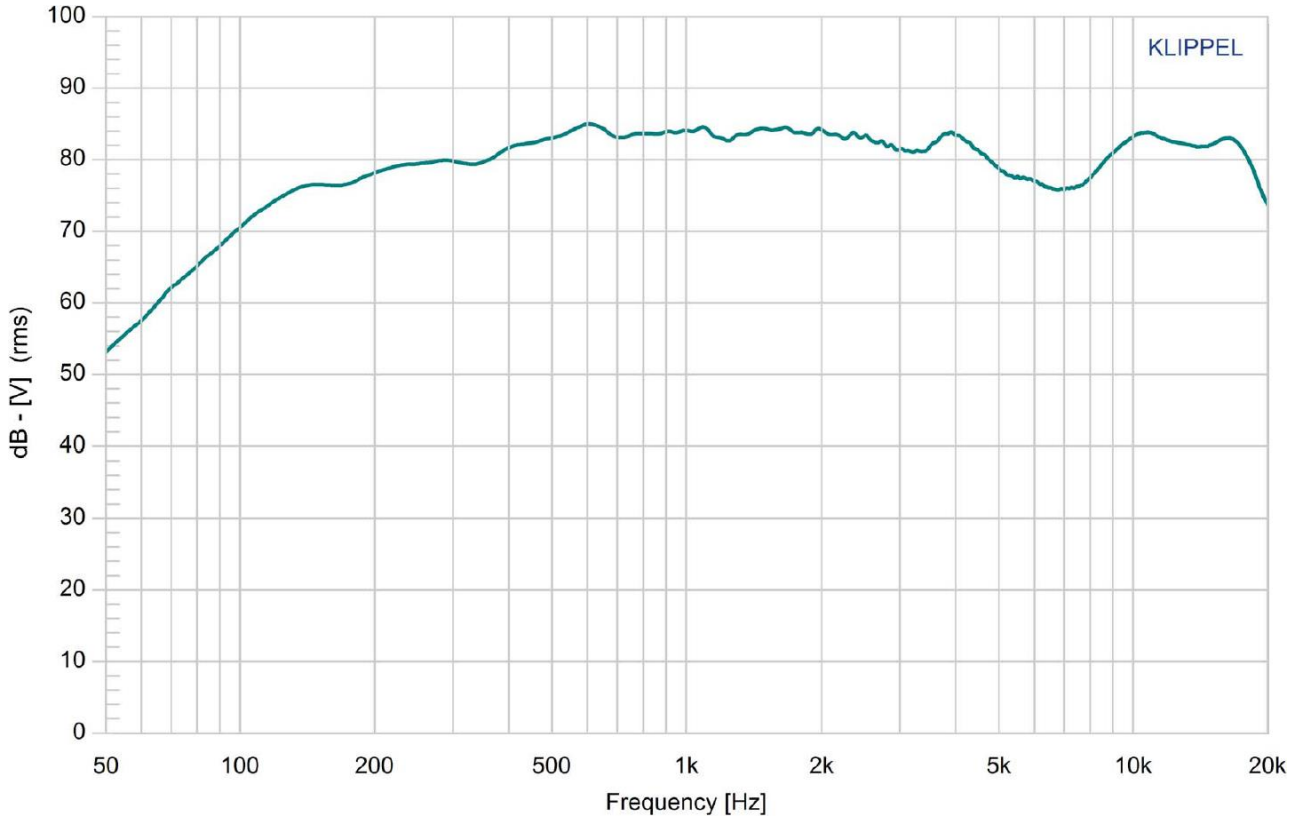

This document contains data proprietary to PUI Audio Inc. Any use or reproduction, in any form, without prior written permission of PUI Audio Inc. is prohibited.
©2024, PUI Audio Inc.

Typical THD vs. Frequency (P_{DRIVE} = 1W)

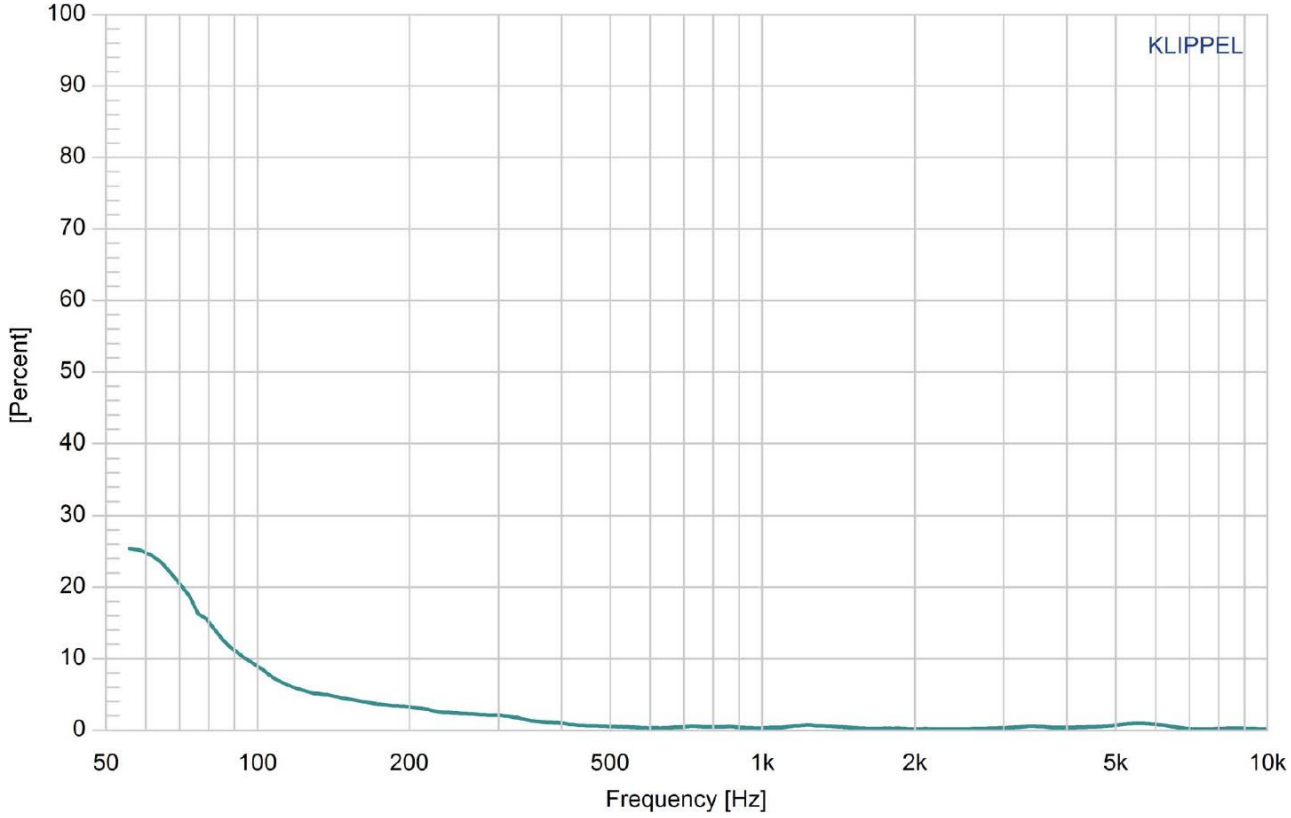

Typical Impedance Response

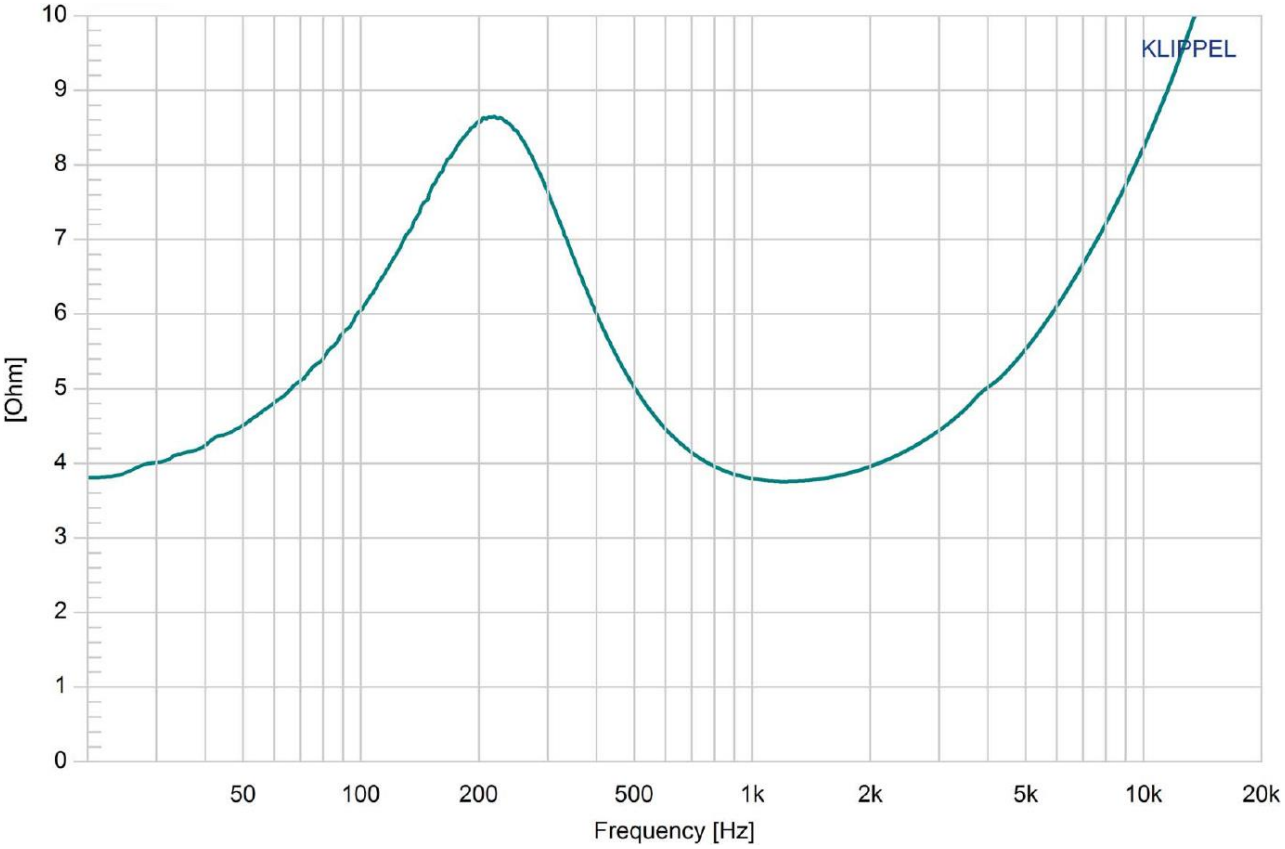

This document contains data proprietary to PUI Audio Inc. Any use or reproduction, in any form, without prior written permission of PUI Audio Inc. is prohibited.
©2024, PUI Audio Inc.

Thiele/Small Parameters

Theile/Small Parameters			
Specification	**Electrical Parameters Description**	**Value**	**Unit**
Re	Electrical voice coil resistance at DC	3.47	Ohm
Le	Frequency independent part of voice coil inductance	0.101	mH
L2	Para-inductance of voice coil	0.052	mH
R2	Electrical resistance due to eddy current losses	1.5	Ohm
Cmes	Electrical capacitance representing moving mass	133.37	µF
Lces	Electrical inductance representing driver compliance	3.23	mH
Res	Resistance due to mechanical losses	4.01	Ohm
fs	Driver resonance frequency	223	Hz
	Mechanical Parameters (Using a laser)		
Mms	Mechanical mass of driver diaphragm assembly including air load	0.773	g
Mmd (Sd)	Mechanical mass of voice coil and diaphragm without air load	0.755	g
Rms	Mechanical resistance of total-driver losses	1.445	kg/s
Cms	Mechanical compliance of driver suspension	0.556	mm/N
Kms	Mechanical stiffness of driver suspension	1.8	N/mm
Bl	Force factor (Bl product)	2.408	-
Lambda s	Suspension creep factor	0.219	-
	Loss Factors		
Qtp	total Q-factor considering all losses	0.379	-
Qms	Mechanical Q-factor of driver in free air considering Rms only	0.816	-
Qes	Electrical Q-factor of driver in free air considering Re only	0.706	-
Qts	total Q-factor considering Re and Rms only	0.379	-
	Other Parameters		
Vas	Equivalent air volume of suspension	0.03161	-
n0	Reference efficiency (2 pi-radiation using Re)	0.061	%
Lm	Characteristic sound pressure level (SPL at 1m for 1W @ Re)	80.08 dB	dB
Lnom	Nominal sensitivity (SPL at 1m for 1W @ Zn)	80.69 dB	dB
rmse Z	Root-mean-square fitting error of driver impedance Z(f)	4.19	%
rmse Hx	Root-mean-square fitting error of transfer function Hx (f)	5.83	%
Series Re	Resistance of series resistor	0	Ohm
Sd	Diaphragm area	6.33	cm^2

This document contains data proprietary to PUI Audio Inc. Any use or reproduction, in any form, without prior written permission of PUI Audio Inc. is prohibited.
©2024, PUI Audio Inc.

Mounting Precautions

To ensure normal operation of the speaker, allow enough free space for diaphragm movement. The minimum distance required, "X," is the dimensioned drawing below is 1.2mm.

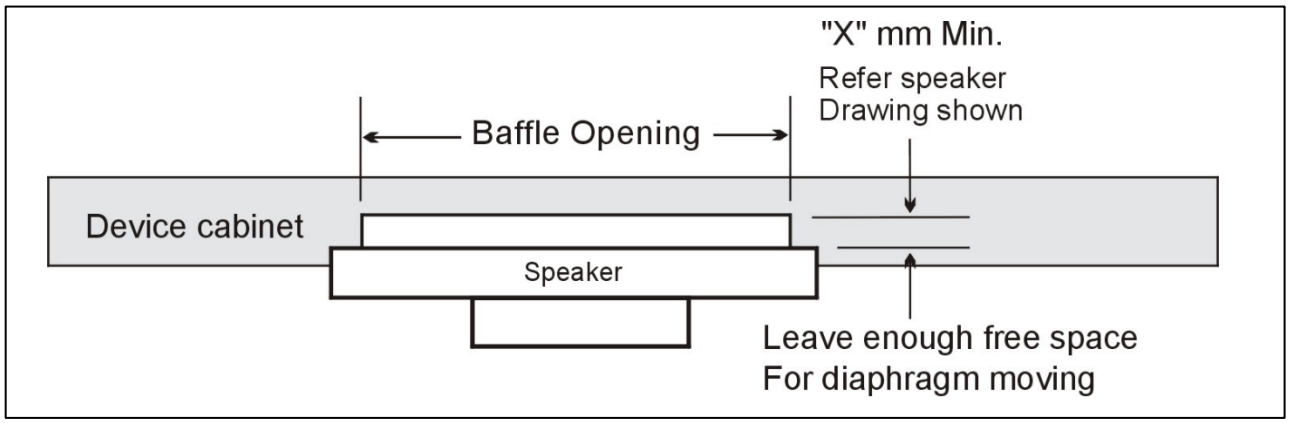

This document contains data proprietary to PUI Audio Inc. Any use or reproduction, in any form, without prior written permission of PUI Audio Inc. is prohibited.
©2024, PUI Audio Inc.

Reliability Testing

Type of Test	Test Specifications	Judgement
High Temperature Test GB2423.2-81	96 hours at +60°C ± 2°C followed by one hour in normal room temperature	SPL shall not deviate by ±3dB. Resonant frequency shall not deviate by ±50Hz. (compared with pre-test measurement)
Low Temperature Test GB2423.1-81	96 hours at -25°C ± 2°C followed by one hour in normal room temperature	
Humidity Test GB5170.18-87	96 hours at +40°C ± 2°C with relative humidity between 90% and 95% followed by 6 hours in normal room temperature	
Temperature Cycle Testing GB5170.18-87	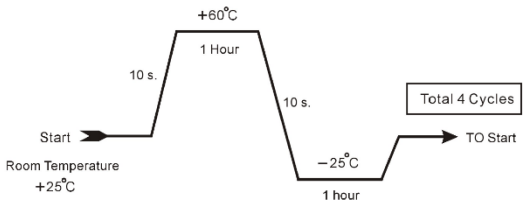	SPL shall not deviate by ±4dB. Resonant frequency shall not deviate by ±80Hz. (compared with pre-test measurement)
Vibration Test GB11606.8-89	Frequency 30±15 Hz, Amplitude 1.5 mm for 3 Hours	SPL shall not deviate by ±3dB. (compared with pre-test measurement)
Drop Test GB2423.8-81	75 cm free falling on concrete floor, 10 times.	
Load Test GB/T12060.5-2011	Speaker should not fail after applying 20Hz ~ 20kHz pink noise with HPF rated power input (RMS), 96 hours.	

Dimensions (All dimensions in mm; tolerance is +0.5mm, unless otherwise stated.)

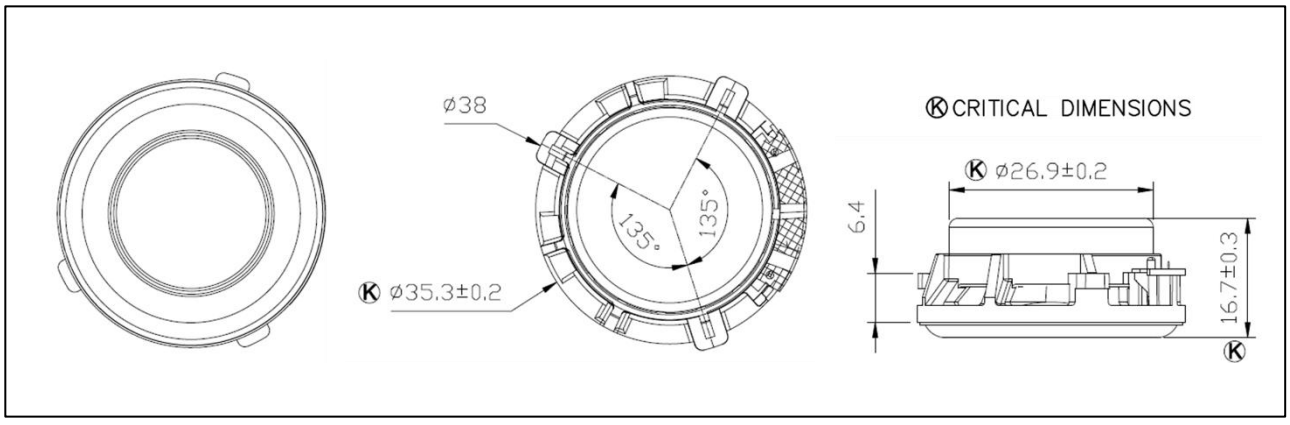

This document contains data proprietary to PUI Audio Inc. Any use or reproduction, in any form, without prior written permission of PUI Audio Inc. is prohibited.
©2024, PUI Audio Inc.

Packaging

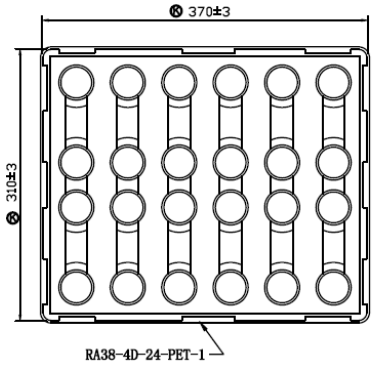

NOTE
24 PCS per Layer
Total 14 Layer per box
Total 336 PCS per box
38.5*32.5*36.5 cm
HF+ROHS 2

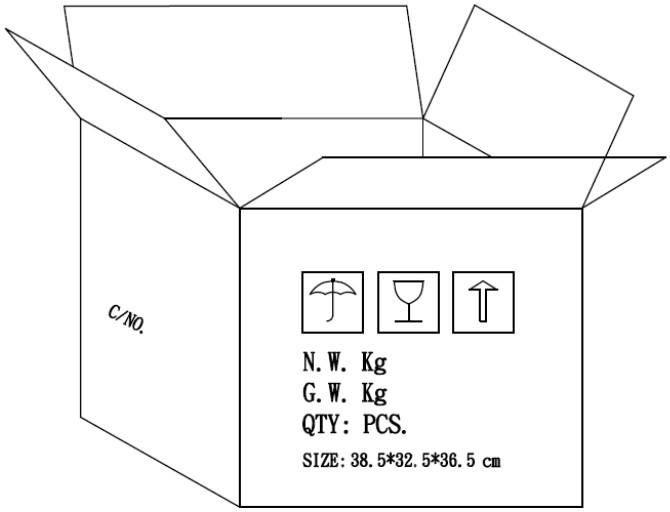

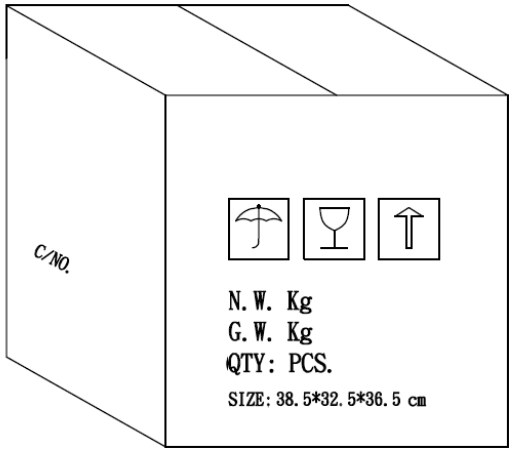

This document contains data proprietary to PUI Audio Inc. Any use or reproduction, in any form, without prior written permission of PUI Audio Inc. is prohibited.
©2024, PUI Audio Inc.

Notes

Measurement & Standard Reference

Abstract from GB/T 9396-1996 and IEC 268-5:1989: methods of measurement for main characteristics of loudspeakers.

Rated sine voltage.

A sinusoidal signal voltage specified by the manufacturer which makes the speaker work continuously in the rated frequency range, without causing electrical or mechanical damage to the speaker. The continuous voltage time is 1 hour.

Rated sine power.

The rated sine power corresponding with the rated sine voltage defined by: V_S^2/R, where V_s indicates the rated sin voltage and R indicates the rated impedance of the speaker.

Rated noise power.

The rated sine power corresponding with the rated sine voltage defined by: V_n^2/R, where V_n indicates the rated sin voltage and R indicates the rated impedance of the speaker.

Specifications Revisions

Revision	Description	Date	Approved
A	Datasheet released from Engineering	03/25/2024	KH

Note:

1. Unless otherwise specified:
   A. All dimensions are in millimeters.
   B. Default tolerances are ±0.5mm and angles are ±3°.
2. Specifications subject to change or withdrawal without notice.