SPECIFICATIONS

PARAMETERS	VALUES	UNITS
RATED INPUT POWER	0.8	W
MAX INPUT POWER	1	W
IMPEDANCE	8 ± 15%	OHM
OUTPUT SPL @ 1W/0.5M (AT 0.6, 0.8, 1.0, 1.2 kHz)	85 ± 3	dBA
DISTORTION (MAX.)	5%	-
RESONANT FREQUENCY	450 ± 20%	Hz
FREQUENCY RANGE	450 ~ 20,000	Hz
HOUSING MATERIAL	METAL	-
CONE MATERIAL	MYLAR	-
MAGNET MATERIAL	N35	-
OPERATING TEMPERATURE	-20 ~ +105	°C
WEIGHT	5.2	grams

THIS DOCUMENT CONTAINS DATA PROPRIETARY TO PROJECTS UNLIMITED, INC. ANY USE OR REPRODUCTION, IN ANY FORM, WITHOUT PRIOR WRITTEN PERMISSION OF PROJECTS UNLIMITED, INC. IS PROHIBITED.
©2003, Projects Unlimited Inc.

REVISION HISTORY

LTR	DESCRIPTION	DATE	APPROVED
-	RELEASED FROM ENGINEERING	1/12/2017	



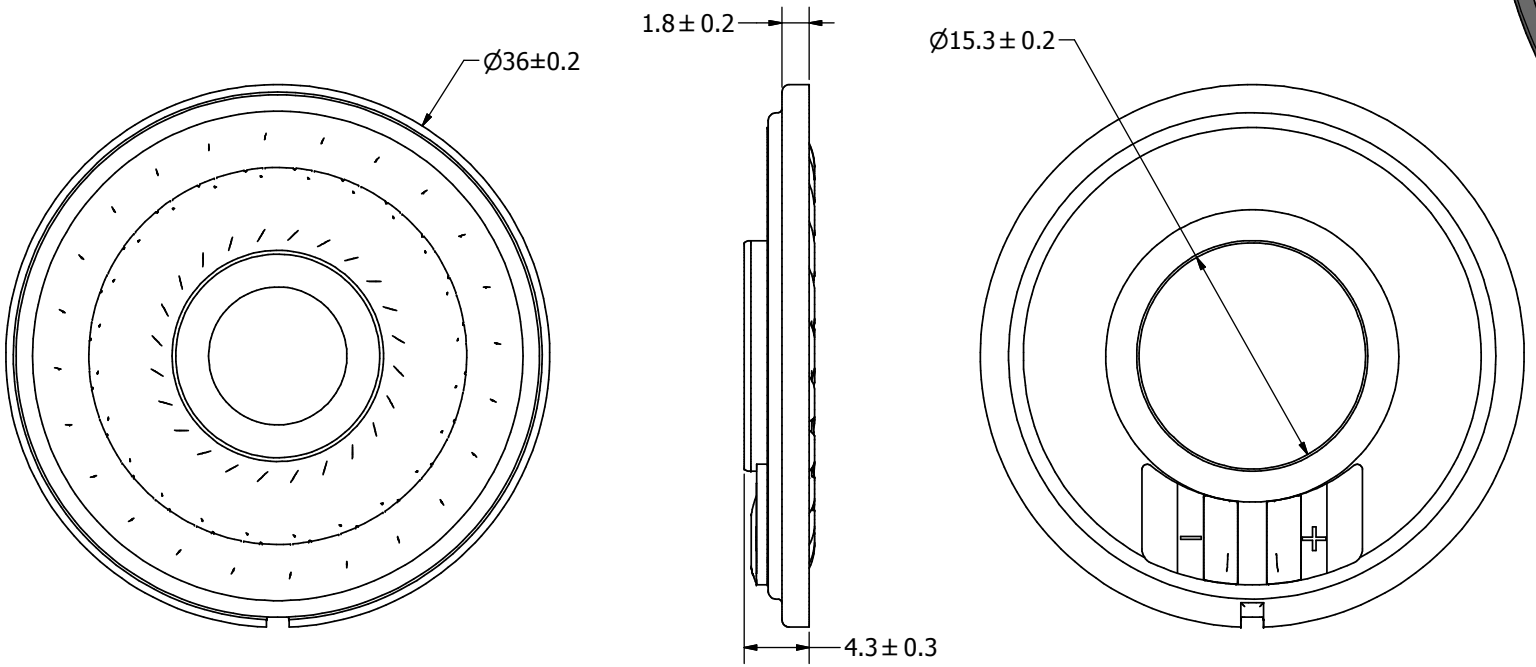

NOTES:

1. ALL DIMENSIONS ARE IN MILLIMETERS.
2. SPECIFICATIONS SUBJECT TO CHANGE OR WITHDRAWL WITHOUT NOTICE.
3. THIS PART IS RoHS 2011/65/EU COMPLIANT.

UNLESS OTHERWISE SPECIFIED: DIMENSIONS ARE IN MILLIMETERS, TOLERANCES ARE ±0.5 AND ANGLES ARE ±3°.	SIZE	Designed by	Date	Checked by	Date	Approved by	Date	Drawn Date
		M.V.	1/12/2017	M.V.	1/12/2017	B.R.	1/12/2017	1/12/2017
AS03608MR-4-HT-R.idw	A3	pui audio inc — a projects unlimited company		AS03608MR-4-HT-R				
				Speaker			Edition -	Sheet 1 / 1