THIS DOCUMENT CONTAINS DATA PROPRIETARY TO PROJECTS UNLIMITED, INC. ANY USE OR REPRODUCTION, IN ANY FORM, WITHOUT PRIOR WRITTEN PERMISSION OF PROJECTS UNLIMITED, INC. IS PROHIBITED.
© 2005, Projects Unlimited Inc.

SPECIFICATIONS

PARAMETERS	VALUES	UNITS
RATED INPUT POWER	1.5	W
MAX INPUT POWER	3	W
IMPEDANCE	4±15%	OHM
OUTPUT SPL @ 1W/0.5M (AT 0.8, 1.0, 1.2, 1.5 kHz)	84±3	dBA
DISTORTION (MAX.)	10%	–
RESONANT FREQUENCY	550±20%	Hz
FREQUENCY RANGE	200 ~ 20,000	Hz
HOUSING MATERIAL	ABS	–
CONE MATERIAL	CLOTH	–
MAGNET MATERIAL	Nd–Fe–B	–
OPERATING TEMPERATURE	–30 ~ +60	℃
WEIGHT	8	grams

REVISIONS

LTR	DESCRIPTION	DATE	APPROVED
–	RELEASED FROM ENGINEERING	6/18/10	

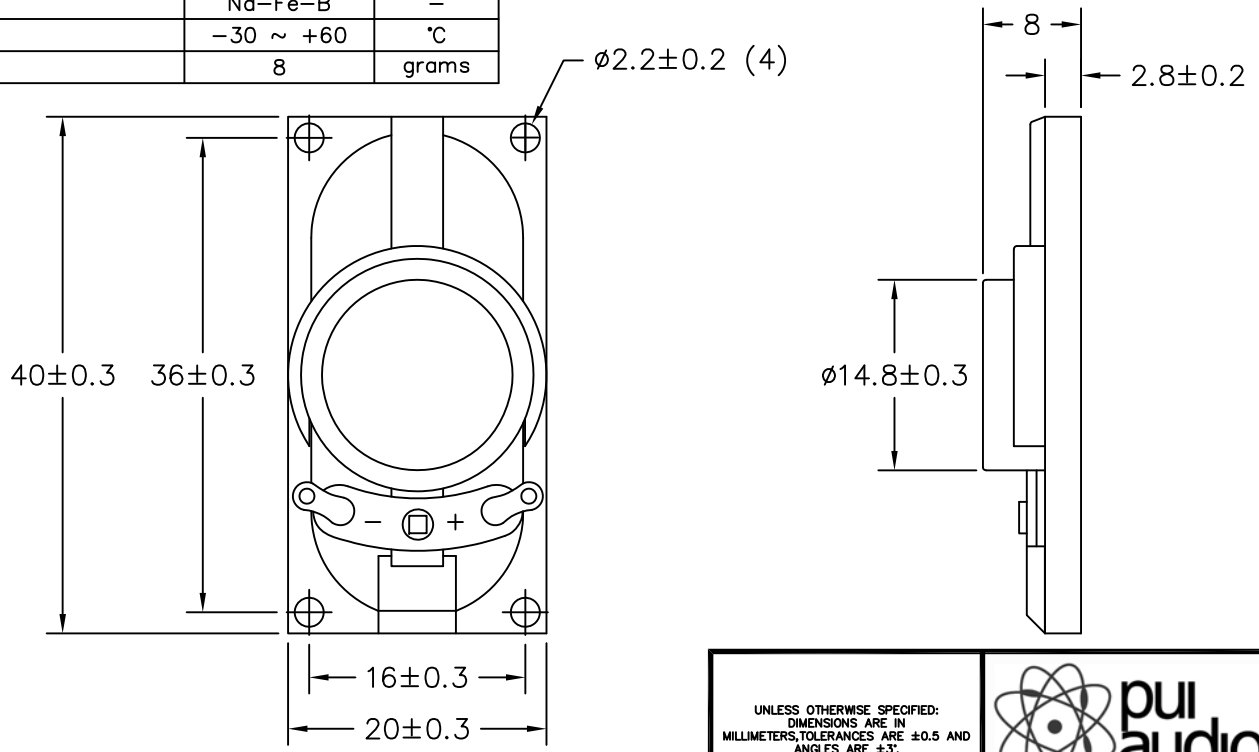

NOTES:

1. ALL DIMENSIONS ARE IN MILLIMETERS.
2. SPECIFICATION SUBJECT TO CHANGE OR WITHDRAWAL WITHOUT NOTICE.
3. THIS PART IS RoHS 2002/95/EC COMPLIANT.

FILE NAME: AS04004CO–2–R.DWG

UNLESS OTHERWISE SPECIFIED: DIMENSIONS ARE IN MILLIMETERS, TOLERANCES ARE ±0.5 AND ANGLES ARE ±3°.

APPROVALS		DATE
DRAWN	J.D.	6/10
CHECKED	C.W.	6/10
APPROVED	B.R.	6/10

pui audio
A Division of Projects Unlimited

6300 Sand Lake Road
Dayton, Ohio 45414

SPEAKER

SIZE A | DRAWING NO. AS04004CO–2–R

SCALE: N.T.S. | SHEET 1 OF 1