This document contains data proprietary to PUI Audio Inc. Any use or reproduction, in any form, without prior written permission of PUI Audio Inc. is prohibited.
©2024, PUI Audio Inc.

PUIaudio

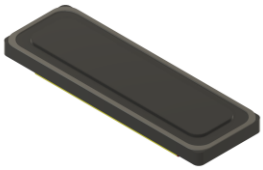

Data Sheet	AS04004MO-SP40

The **AS04004MO-SP40** is a slim line Mobile Series speaker designed for applications that require extended, flat high frequency response and benefit from very low THD.

Features:

- 89dBSPL: 1W dissipation, distance = 0.5m
- 2.0W continuous dissipation
- 400Hz free-air resonance
- 40mm x 13mm x 4.5mm dimensions

Specifications

(Specifications measured with following conditions: ambient temperature; 15°C ≤ T_A ≤_35°C, relative humidity; 25% ≤ RH_A ≤ 75%, according to standard GB/T9396-1996, unless otherwise stated. Judgement Condition: ambient temperature; 20 ±2°C; relative humidity; 63% ≤ RH_A ≤ 67%. Product shelf life valid for 12 months.

Parameters	Values	Units
Rated Input Power	2.0	Watts
Maximum Input Power	2.5	Watts
Impedance	4 ±15%	Ohms
Sensitivity (SPL) f = ave. 0.8kHz, 1kHz, 1.2kHz, 1.5kHz P_{DRIVE} = 1.0W, 50cm, 5cc back volume P_{DRIVE} = 1.0W, 10cm, 5cc back volume P_{DRIVE} = 2.0W, 10cm, 5cc back volume	 75 ±3 89 ±3 92 ±3	dB
Resonant Frequency (f_0) 5cc back volume	400 ±20%	Hz
Frequency Range (-10dBSPL)	$f_0 \le f \le 20{,}000$	Hz
Total Harmonic Distortion (THD) f = 1kHz P_{DRIVE} = 2.0W, 5cc back volume	≤ 5	%
Frame Material	PPA	-
Magnet Material	NdFeB	-
Diaphragm Material	Aluminum	-
Weight	7.6	gm
Buzz, Rattle, etc.	Not audible with P_{DRIVE} = 2W, sine wave in free air	-

This document contains data proprietary to PUI Audio Inc. Any use or reproduction, in any form, without prior written permission of PUI Audio Inc. is prohibited.
©2024, PUI Audio Inc.

Polarity	Diaphragm moves forward with positive dc current applied to "+" terminal	-
Storage Temperature	$-25 \leq T_S \leq 60$	°C
Operating Temperature	$-25 \leq T_O \leq 50$	°C
Environmental Compliances	ROHS/REACH	-

Measurement Method (Measured with P_{DRIVE} = 1.0W, distance = 0.5m, Temperature: 23 ~ 25°C, Relative Humidity: 55% (max).)

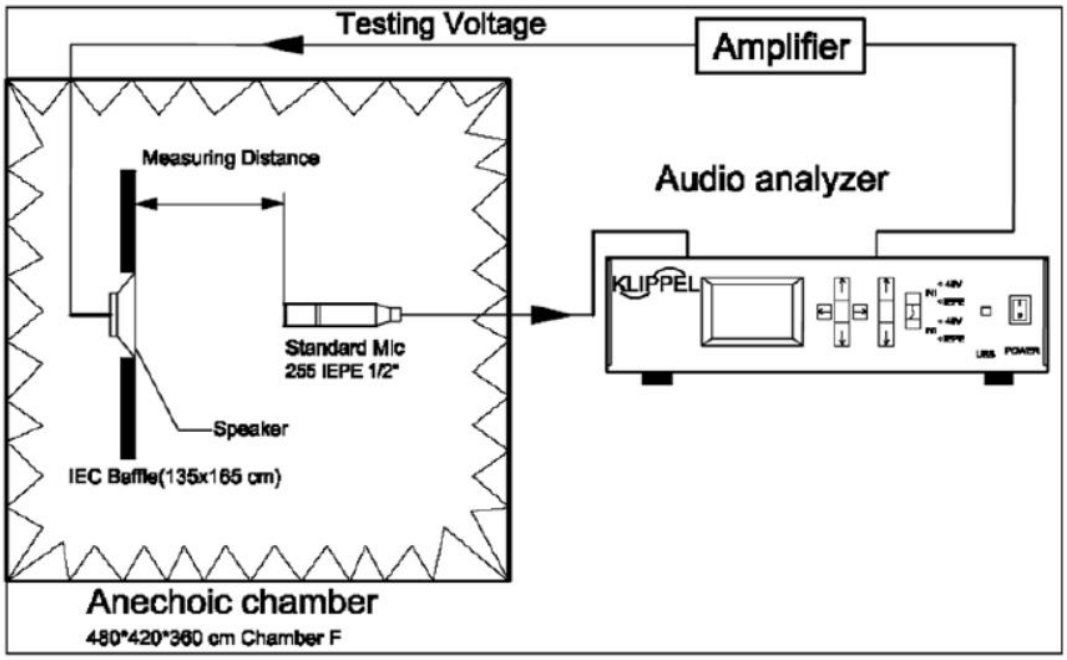

This document contains data proprietary to PUI Audio Inc. Any use or reproduction, in any form, without prior written permission of PUI Audio Inc. is prohibited.
©2024, PUI Audio Inc.

Typical Frequency Response (P_{DRIVE} = 2.0W, distance = 0.1m)

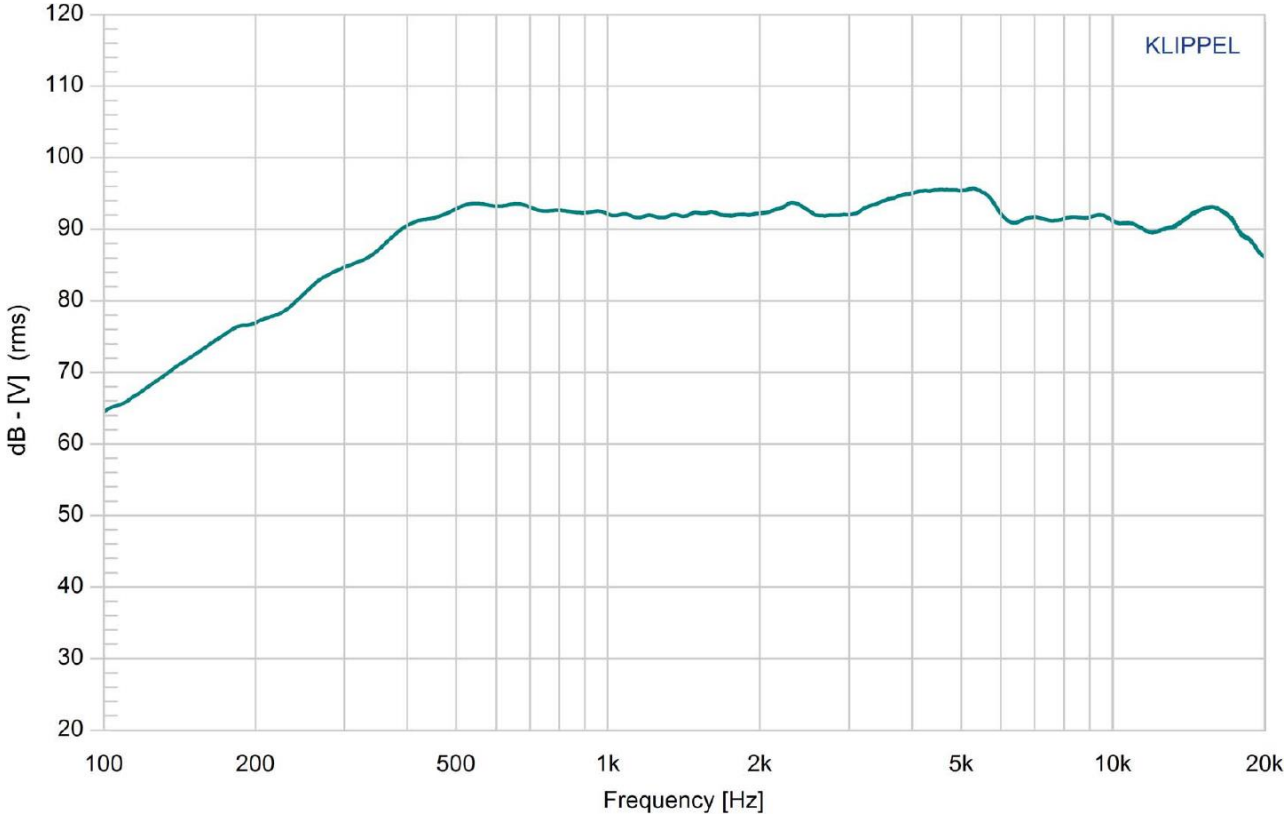

This document contains data proprietary to PUI Audio Inc. Any use or reproduction, in any form, without prior written permission of PUI Audio Inc. is prohibited.
©2024, PUI Audio Inc.

Typical THD vs. Frequency (P_{DRIVE} = 2.0W, 5cc back volume)

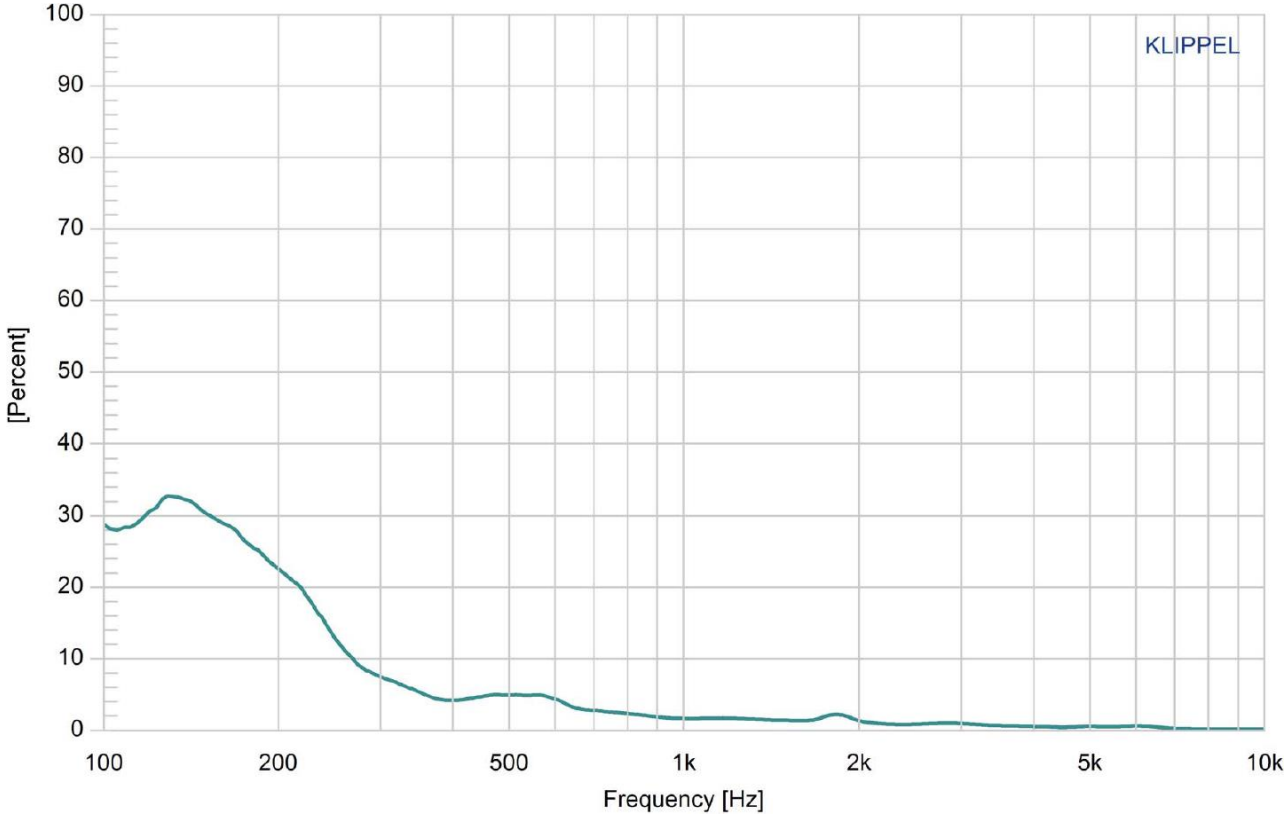

Impedance Curve

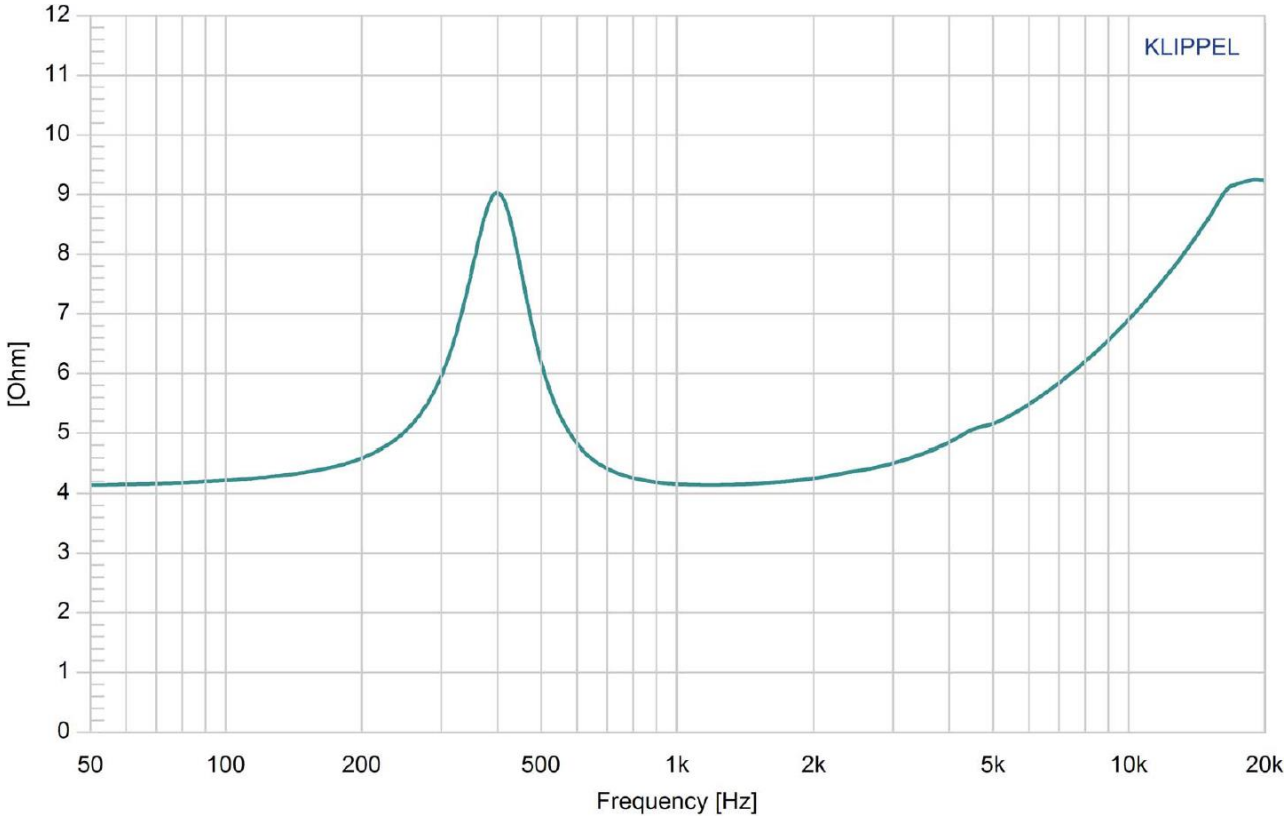

This document contains data proprietary to PUI Audio Inc. Any use or reproduction, in any form, without prior written permission of PUI Audio Inc. is prohibited.
©2024, PUI Audio Inc.

Reliability Testing

Type of Test	Test Specifications	Judgement
High Temperature Test GB2423.2-81	96 hours at +60°C ± 2°C followed by one hour in normal room temperature	SPL shall not deviate by ±3dB. Resonant frequency shall not deviate by ±50Hz. (compared with pre-test measurement)
Low Temperature Test GB2423.1-81	96 hours at -25°C ± 2°C followed by one hour in normal room temperature	
Humidity Test GB5170.18-87	96 hours at +40°C ± 2°C with relative humidity between 90% and 95% followed by 6 hours in normal room temperature	
Temperature Cycle Testing GB5170.18-87	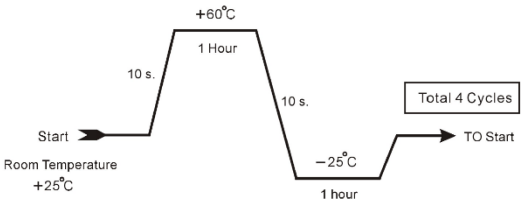	SPL shall not deviate by ±4dB. Resonant frequency shall not deviate by ±80Hz. (compared with pre-test measurement)
Vibration Test GB11606.8-89	Frequency 30±15 Hz, Amplitude 1.5 mm for 3 Hours	SPL shall not deviate by ±3dB. (compared with pre-test measurement)
Drop Test GB2423.8-81	75 cm free falling on concrete floor, 10 times.	
Load Test GB/T12060.5-2011	Speaker should not fail after applying 20Hz ~ 20kHz pink noise with HPF rated power input (RMS), 96 hours.	

Dimensions (Tolerance: ±0.5mm, unless otherwise specified.)

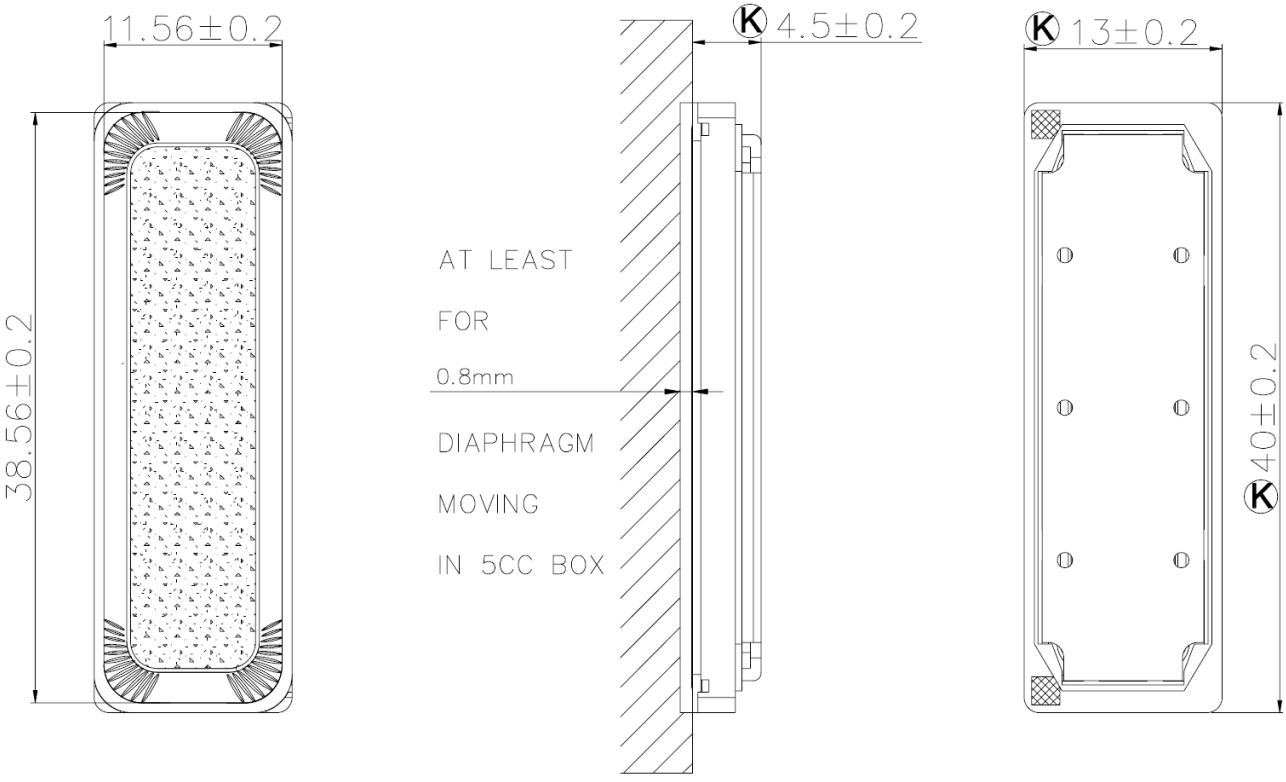

This document contains data proprietary to PUI Audio Inc. Any use or reproduction, in any form, without prior written permission of PUI Audio Inc. is prohibited.
©2024, PUI Audio Inc.

Packaging

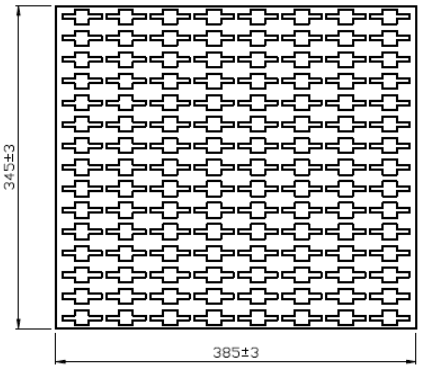

NOTE
120 PCS per Layer
Total 14 Layer per box
Total 1680 PCS per box
紙箱:41.5*38.5*38.5 cm
HF+ROHS 2

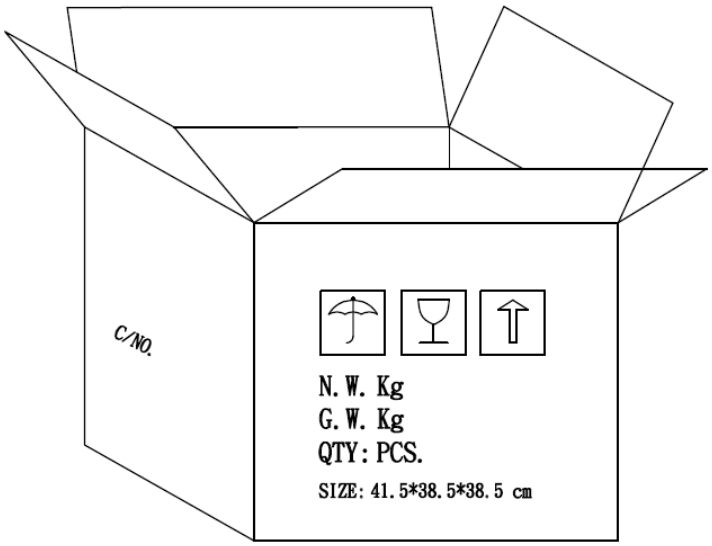

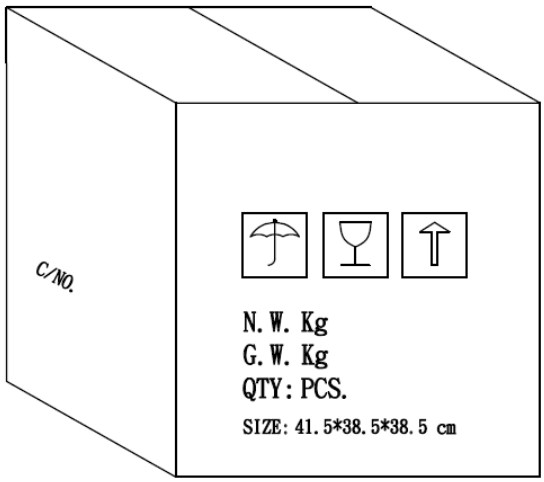

This document contains data proprietary to PUI Audio Inc. Any use or reproduction, in any form, without prior written permission of PUI Audio Inc. is prohibited.
©2024, PUI Audio Inc.

Measurement & Standard Reference

Abstract from GB/T 9396-1996 and IEC 268-5:1989: methods of measurement for main characteristics of loudspeakers.

5.1 Rated sine voltage.

A sinusoidal signal voltage specified by the manufacturer which makes the speaker work continuously in the rated frequency range, without causing electrical or mechanical damage to the speaker. The continuous voltage time is 1 hour.

5.2 Rated sine power.

The rated sine power corresponding with the rated sine voltage defined by: U_S^2/R, where U_s indicates the rated sin voltage and R indicates the rated impedance of the speaker.

5.3 Rated noise power.

The rated sine power corresponding with the rated sine voltage defined by: U_n^2/R, where U_n indicates the rated sin voltage and R indicates the rated impedance of the speaker.

Specifications Revisions

Revision	Description	Date	Approved
A	Released from Engineering	03/25/2024	KH

Notes:

1. Unless otherwise specified:
   A. All dimensions are in millimeters.
   B. Default tolerances are ±0.5mm and angles are ±3°.
2. Specifications subject to change or withdrawal without notice.