This document contains data proprietary to PUI Audio Inc. Any use or reproduction, in any form, without prior written permission of PUI Audio Inc. is prohibited.
©2024, PUI Audio Inc.

PUIaudio



Data Sheet AS04008PR-6

The **AS04008PR-6** is designed for applications that require robust low-frequency response in compact designs.

Features:

- 86dBSPL: 1W dissipation, distance = 0.5m
- 3.0W continuous dissipation
- 170Hz free-air resonance
- 40mm diameter x 19mm dimensions

Specifications

Parameters	Values	Units
Rated Input Power	3.0	Watts
Maximum Input Power	4.0	Watts
Impedance	8 ±15%	Ohms
Sensitivity (SPL @ 2kHz) P_{DRIVE} = 1.0W, distance = 0.5m f = ave. 0.6kHz, 0.8kHz, 1.0kHz, 1.2kHz	86 ±3	dB
Resonant Frequency (f_0)	170 ±20%	Hz
Frequency Range (-10 dB)	$f_0 \leq f \leq 20{,}000$	Hz
Total Harmonic Distortion (THD) f = 1 kHz, P_{DRIVE} = 1.0W	≤ 5	%
Frame Material	ABS + 15% GF	-
Magnet Material	NdFeB	-
Diaphragm Material	Sponge + Paper	-
Weight	13.5	gm
Buzz, Rattle, etc.	Not audible with P_{DRIVE} = 3.0W, sine wave	-
Polarity	Applying positive dc current to "+" terminal moves diaphragm forward	-
Operating Temperature Range	$-25 \leq T_O \leq 50$	°C
Storage Temperature Range	$-40 \leq T_S \leq 85$	°C
Environmental Compliance	RoHS/REACH	-

This document contains data proprietary to PUI Audio Inc. Any use or reproduction, in any form, without prior written permission of PUI Audio Inc. is prohibited.
©2024, PUI Audio Inc.

Measurement Method (measured with P_{DRIVE} = 1.0, distance = 0.5m)

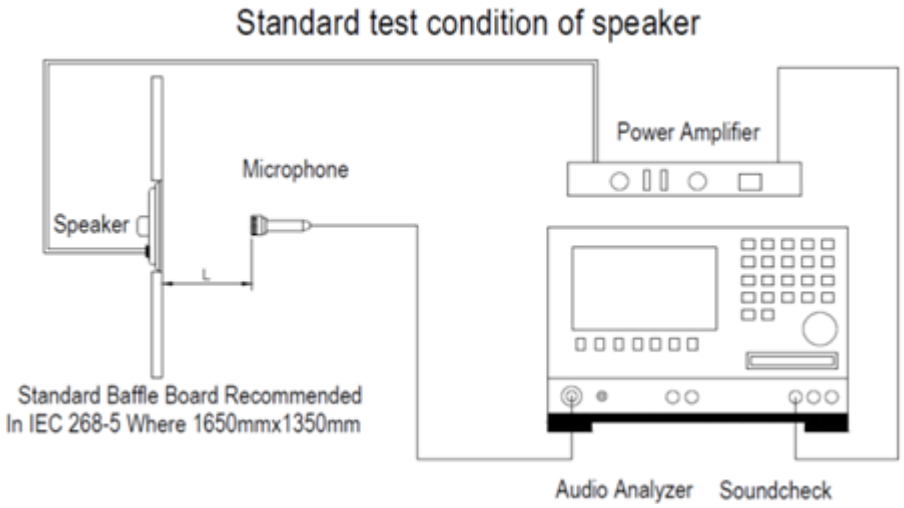

Typical Frequency Response (P_{DRIVE} = 1.0W, distance = 0.5m)

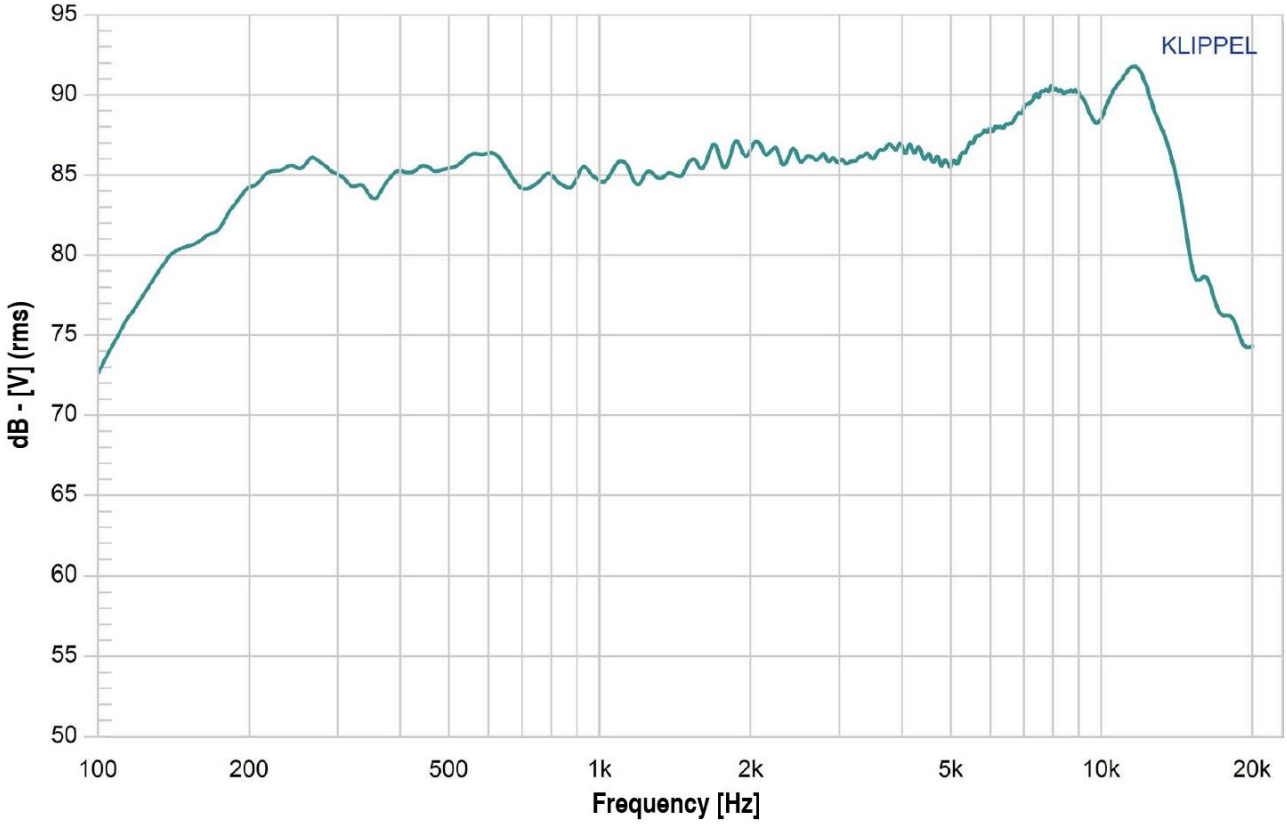

This document contains data proprietary to PUI Audio Inc. Any use or reproduction, in any form, without prior written permission of PUI Audio Inc. is prohibited.
©2024, PUI Audio Inc.

Typical THD vs. Frequency (P_{DRIVE} = 1.0W)

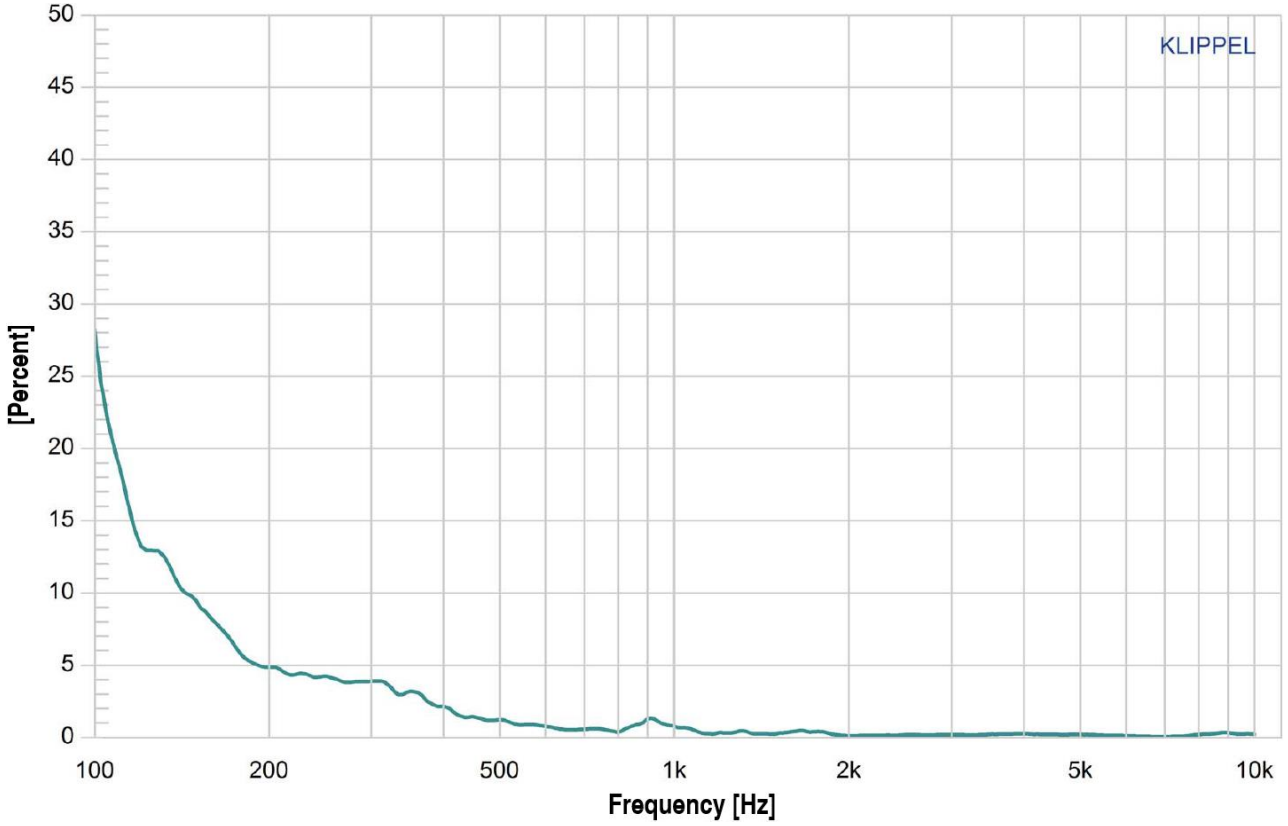

Impedance Response

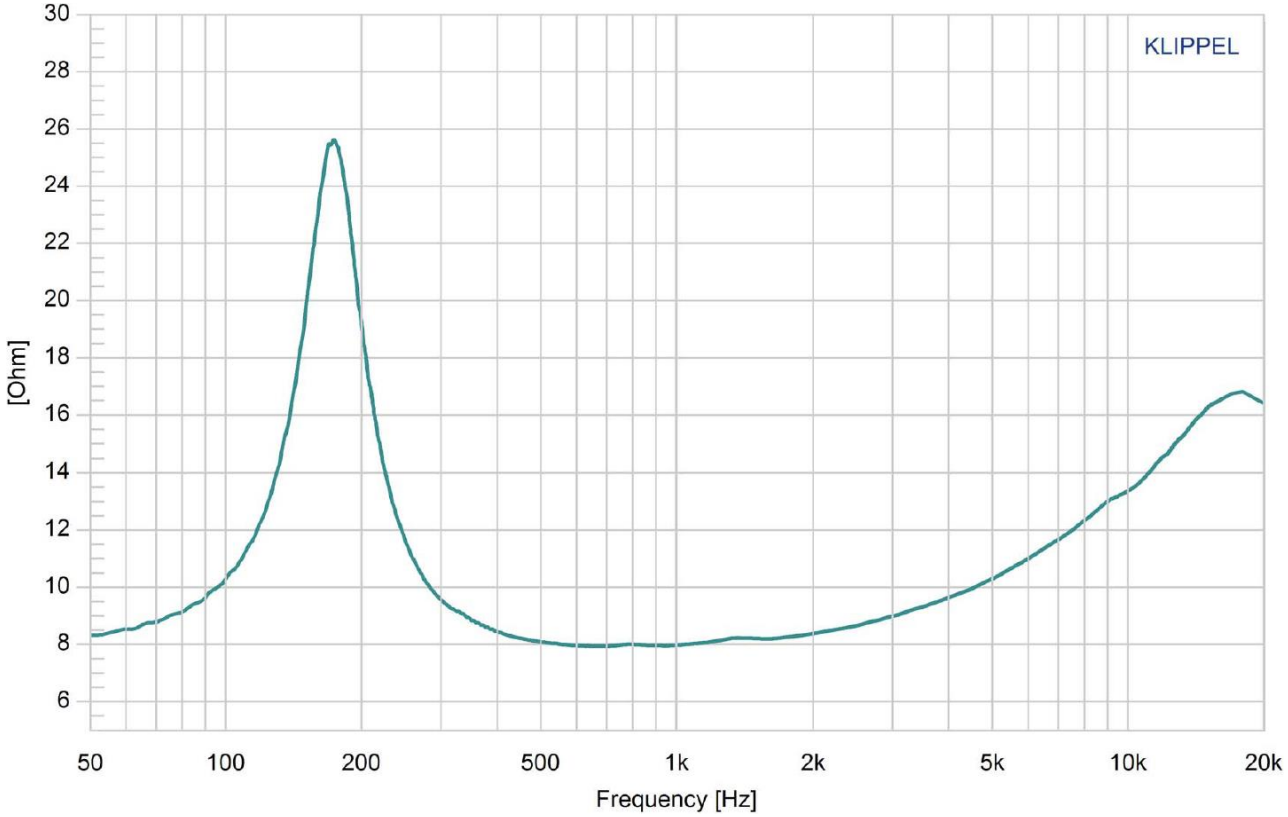

This document contains data proprietary to PUI Audio Inc. Any use or reproduction, in any form, without prior written permission of PUI Audio Inc. is prohibited.
©2024, PUI Audio Inc.

Reliability Testing

Type of Test	Test Specifications	Judgement
High Temperature Test GB2423.2-81	96 hours at +85°C ± 2°C followed by one hour in normal room temperature	SPL shall not deviate by ±3dB. Resonant frequency shall not deviate by ±50Hz. (compared with pre-test measurement)
Low Temperature Test GB2423.1-81	96 hours at -40°C ± 2°C followed by one hour in normal room temperature	
Humidity Test GB5170.18-87	96 hours at +40°C ± 2°C with relative humidity between 90% and 95% followed by 6 hours in normal room temperature	
Temperature Cycle Testing GB5170.18-87	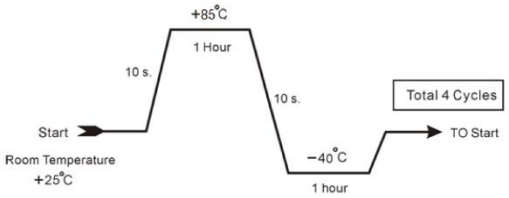	SPL shall not deviate by ±4dB. Resonant frequency shall not deviate by ±80Hz. (compared with pre-test measurement)
Vibration Test GB11606.8-89	Frequency 30±15 Hz, Amplitude 1.5 mm for 3 Hours	SPL shall not deviate by ±3dB. (compared with pre-test measurement)
Drop Test GB2423.8-81	75 cm free falling on concrete floor, 10 times.	
Load Test GB/T12060.5-2011	Speaker should not fail after applying 20Hz ~ 20kHz pink noise with HPF rated power input (RMS), 96 hours.	

Dimensions (Measured in mm. Tolerance = ±0.2mm.)

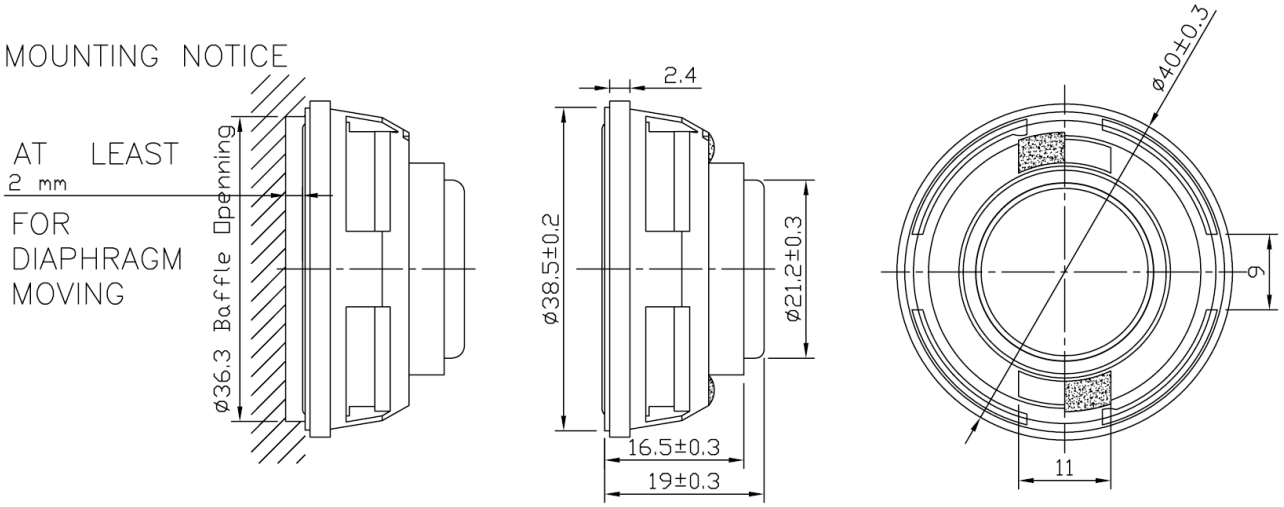

This document contains data proprietary to PUI Audio Inc. Any use or reproduction, in any form, without prior written permission of PUI Audio Inc. is prohibited.
©2024, PUI Audio Inc.

Packaging

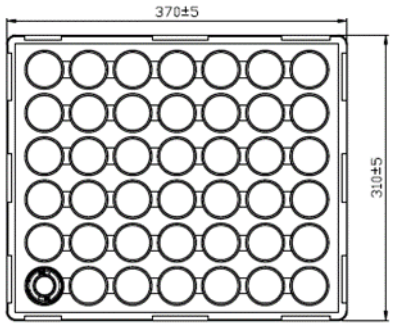

NOTE
42 set per Layer
Total 14 Layer per box
Total 588 set per box
38.5*32.5*36.5 cm
HF+ROHS 2

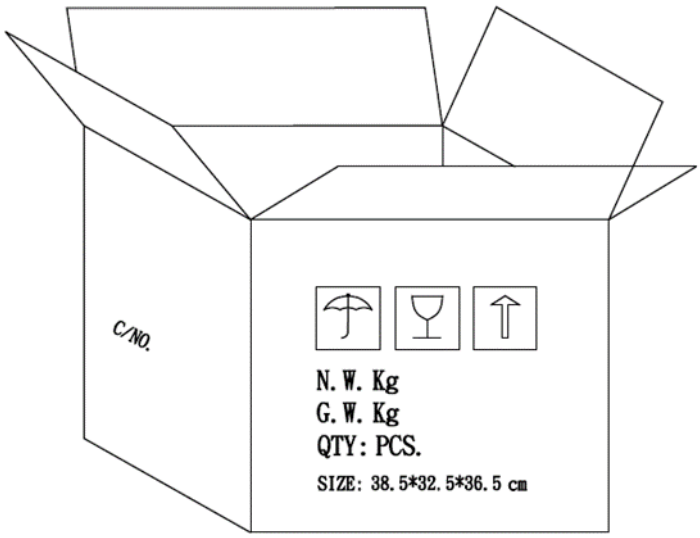

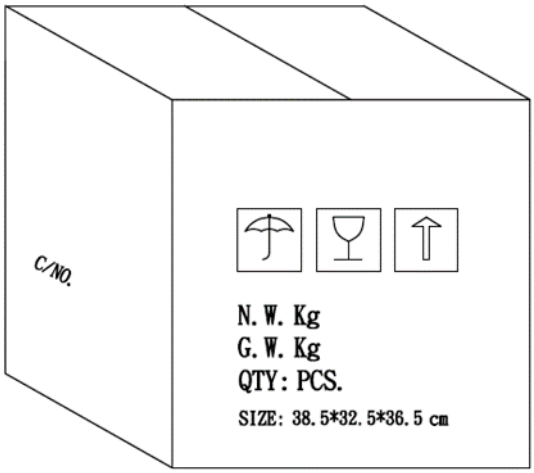

This document contains data proprietary to PUI Audio Inc. Any use or reproduction, in any form, without prior written permission of PUI Audio Inc. is prohibited.
©2024, PUI Audio Inc.

Measurement & Standard Reference

Abstract from GB/T 9396-1996 and IEC 268-5:1989: methods of measurement for main characteristics of loudspeakers.

5.1 Rated sine voltage.

A sinusoidal signal voltage specified by the manufacturer which makes the speaker work continuously in the rated frequency range, without causing electrical or mechanical damage to the speaker. The continuous voltage time is 1 hour.

5.2 Rated sine power.

The rated sine power corresponding with the rated sine voltage defined by: U_S^2/R, where U_s indicates the rated sin voltage and R indicates the rated impedance of the speaker.

5.3 Rated noise power.

The rated sine power corresponding with the rated sine voltage defined by: U_n^2/R, where U_n indicates the rated sin voltage and R indicates the rated impedance of the speaker.

Specifications Revisions

Revision	Description	Date	Approved
A	Datasheet released from Engineering	03/25/2024	KH

Notes:

1. Unless otherwise specified:
   A. All dimensions are in millimeters.
   B. Default tolerances are ±0.2mm and angles are ±3°.
2. Specifications subject to change or withdrawal without notice.