THIS DOCUMENT CONTAINS DATA PROPRIETARY TO PROJECTS UNLIMITED, INC. ANY USE OR REPRODUCTION, IN ANY FORM, WITHOUT PRIOR WRITTEN PERMISSION OF PROJECTS UNLIMITED, INC. IS PROHIBITED.
© 2005, Projects Unlimited Inc.

SPECIFICATIONS

PARAMETERS	VALUES	UNITS
RATED INPUT POWER	1	W
MAX INPUT POWER	2	W
IMPEDANCE	16±15%	OHM
OUTPUT SPL @ 1W/0.5M (AT 1.0, 1.2, 1.5, 2.0 kHz)	86±3	dBA
DISTORTION (MAX.)	5%	–
RESONANT FREQUENCY	800±20%	Hz
FREQUENCY RANGE	Fo ~ 4,000	Hz
HOUSING MATERIAL	METAL	–
CONE MATERIAL	MYLAR	–
MAGNET MATERIAL	NdFeB	–
OPERATING TEMPERATURE	−30 ~ +70	℃
WEIGHT	24.6	grams

REVISIONS			
LTR	DESCRIPTION	DATE	APPROVED
–	RELEASED FROM ENGINEERING	11/18/14	

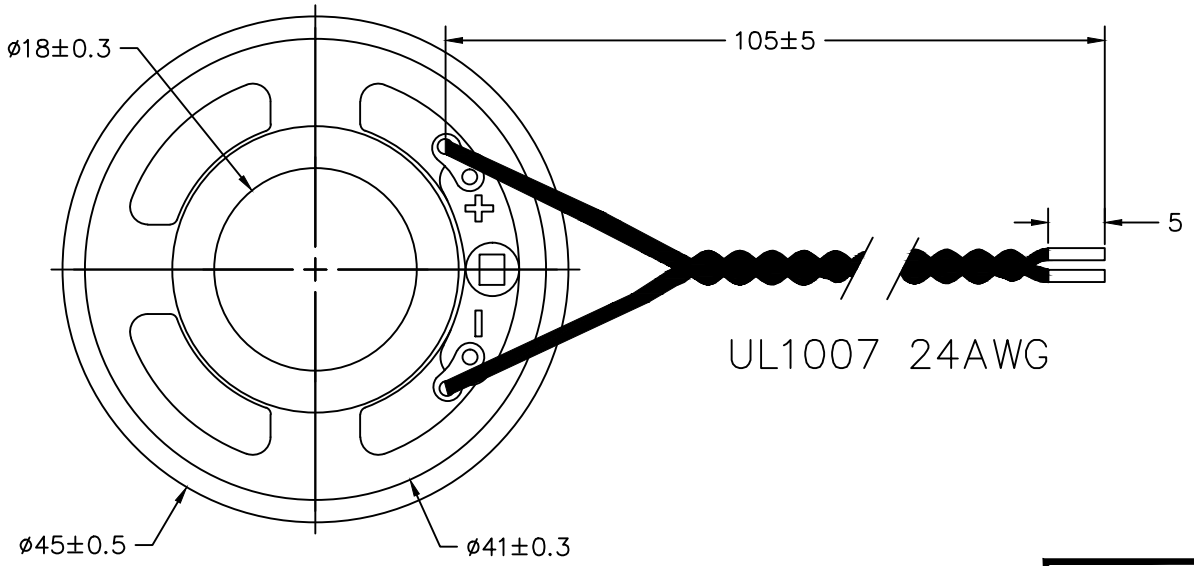

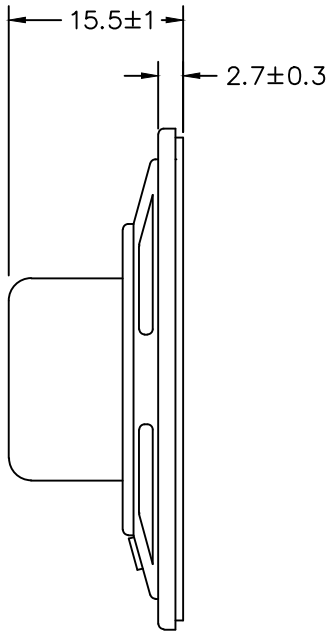

NOTES:

1. ALL DIMENSIONS ARE IN MILLIMETERS.
2. SPECIFICATION SUBJECT TO CHANGE OR WITHDRAWAL WITHOUT NOTICE.
3. THIS PART IS RoHS 2011/65/EU COMPLIANT.

UNLESS OTHERWISE SPECIFIED:

ALL PURCHASES ARE SUBJECT TO THE PUI AUDIO TERMS AND CONDITIONS SALE FOUND AT http://www.puiaudio.com/pdf/terms_conditions.pdf (paper copy available upon request)

DIMENSIONS ARE IN MILLIMETERS,TOLERANCES ARE ±0.5 AND ANGLES ARE ±3°.

pui audio inc
a projects unlimited company

3541 Stop Eight Road
Dayton, Ohio 45414

APPROVALS		DATE
DRAWN	M.L.	10/14
CHECKED	M.L.	10/14
APPROVED	B.R.	10/14

FILE NAME
AS04516MR−2−LW105−R

SPEAKER

SIZE A

DRAWING NO. AS04516MR−2−LW105−R

SCALE: N.T.S.

SHEET 1 OF 1