This document contains data proprietary to PUI Audio Inc. Any use or reproduction, in any form, without prior written permission of PUI Audio Inc. is prohibited.
©2024, PUI Audio Inc.

PUIaudio



DataSheet	AS04604PR

The **AS04604PR** is designed for applications that require robust low-frequency response and low THD in compact designs.

Features:

- 85dBSPL: 1W dissipation, distance = 0.5m
- 10W continuous dissipation
- 220Hz free-air resonance
- 46.4mm diameter x 18.1mm dimensions

Specifications

(Specifications measured with following conditions: ambient temperature; 15°C ≤ T_A ≤_35°C, relative humidity; 25% ≤ RH_A ≤ 75%, according to standard GB/T9396-1996, unless otherwise stated. Judgement Condition: ambient temperature; 20 ±2°C; relative humidity; 63% ≤ RH_A ≤ 67%. Product shelf life valid for 12 months.

Parameters	Values	Units
Rated Input Power	10.0	Watts
Max Input Power	12.0	Watts
Impedance	4 ±15%	Ohms
Sensitivity (SPL) P_{DRIVE} = 1.0W, distance = 0.5m f = ave. 0.8kHz, 1.0kHz, 1.2kHz, 1.5kHz	85 ±3	dB
Resonant Frequency (f_0)	220 ±20%	Hz
Frequency Range (-10dBSPL)	$f_0 \leq f \leq 20{,}000$	Hz
THD f = 1kHz, P_{DRIVE} = 1.0W	≤ 5	%
Frame Material	PBT + 15% GF	-
Magnet Material	NdFeB	-
Diaphragm Material	Carbon Fiber + PU	-
Weight	26.7	gm
Buzz, Rattle, etc.	Not audible with P_{DRIVE} = 10.0W, sine wave	-
Polarity	Applying positive dc current to "+" terminal moves diaphragm forward	-
Storage Temperature	$-40 \leq T_S \leq 85$	°C
Operating Temperature	$-25 \leq T_O \leq 50$	°C
Environmental Compliances	ROHS/REACH	-

This document contains data proprietary to PUI Audio Inc. Any use or reproduction, in any form, without prior written permission of PUI Audio Inc. is prohibited.
©2024, PUI Audio Inc.

Measurement Method (Measured with P_{DRIVE} = 1.0W, distance = 0.5m, Temperature: 23 ~ 25°C, Relative Humidity: 55% (max).)

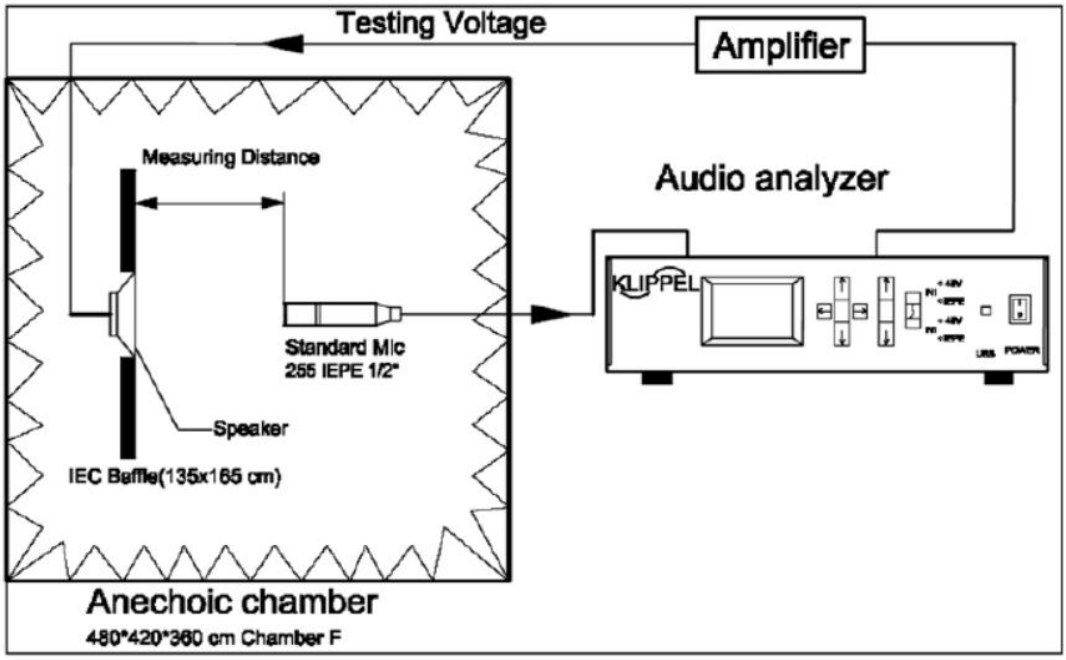

Typical Frequency Response (P_{DRIVE} = 1.0W, distance = 0.5m)

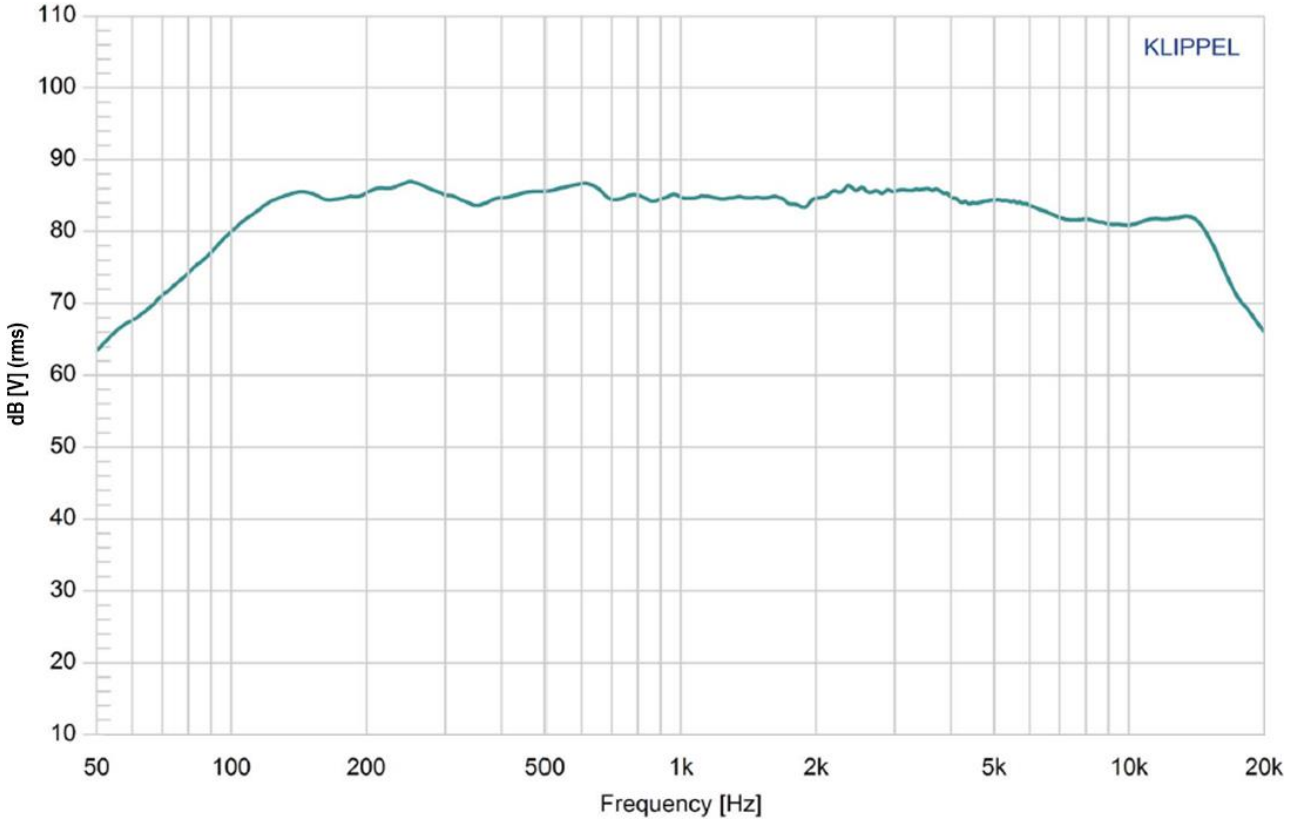

This document contains data proprietary to PUI Audio Inc. Any use or reproduction, in any form, without prior written permission of PUI Audio Inc. is prohibited.
©2024, PUI Audio Inc.

Typical THD vs. Frequency (P_{DRIVE} = 1.0W)

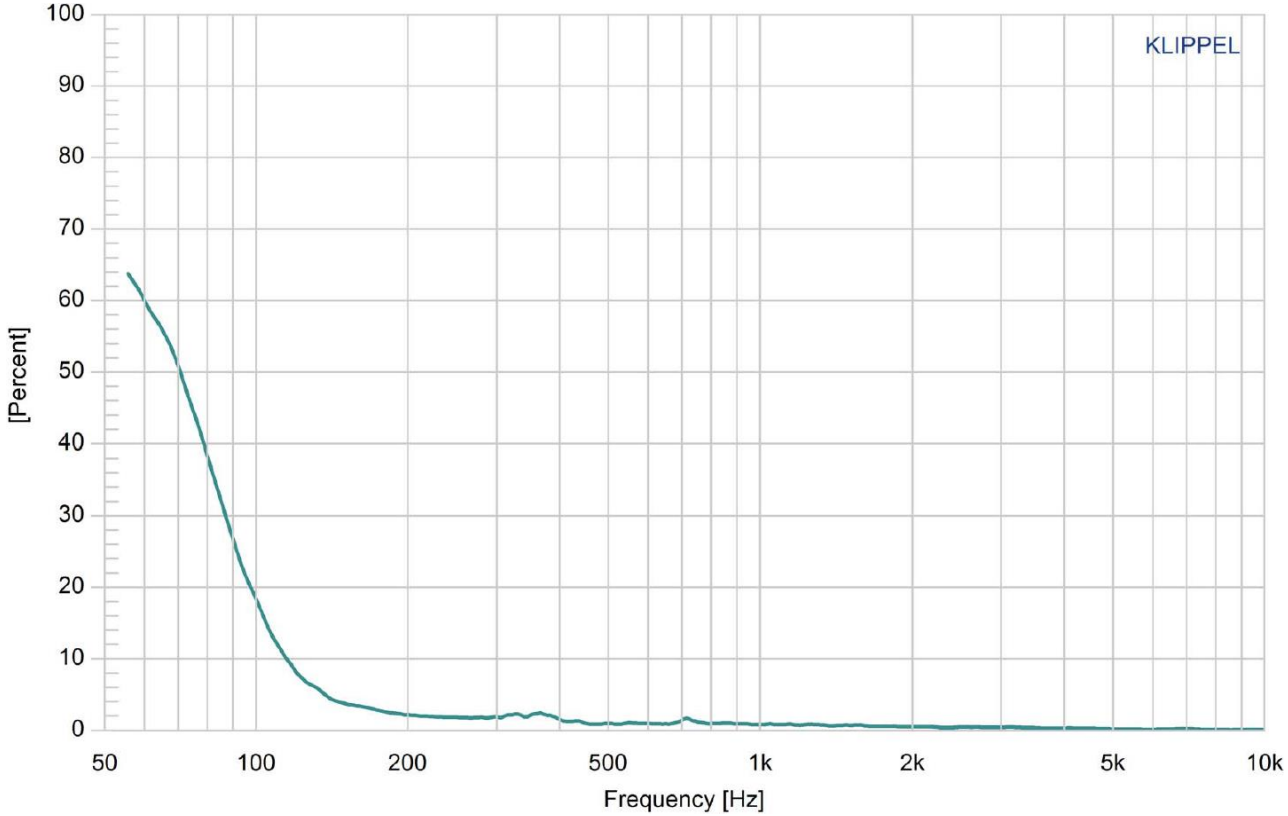

Impedance Curve

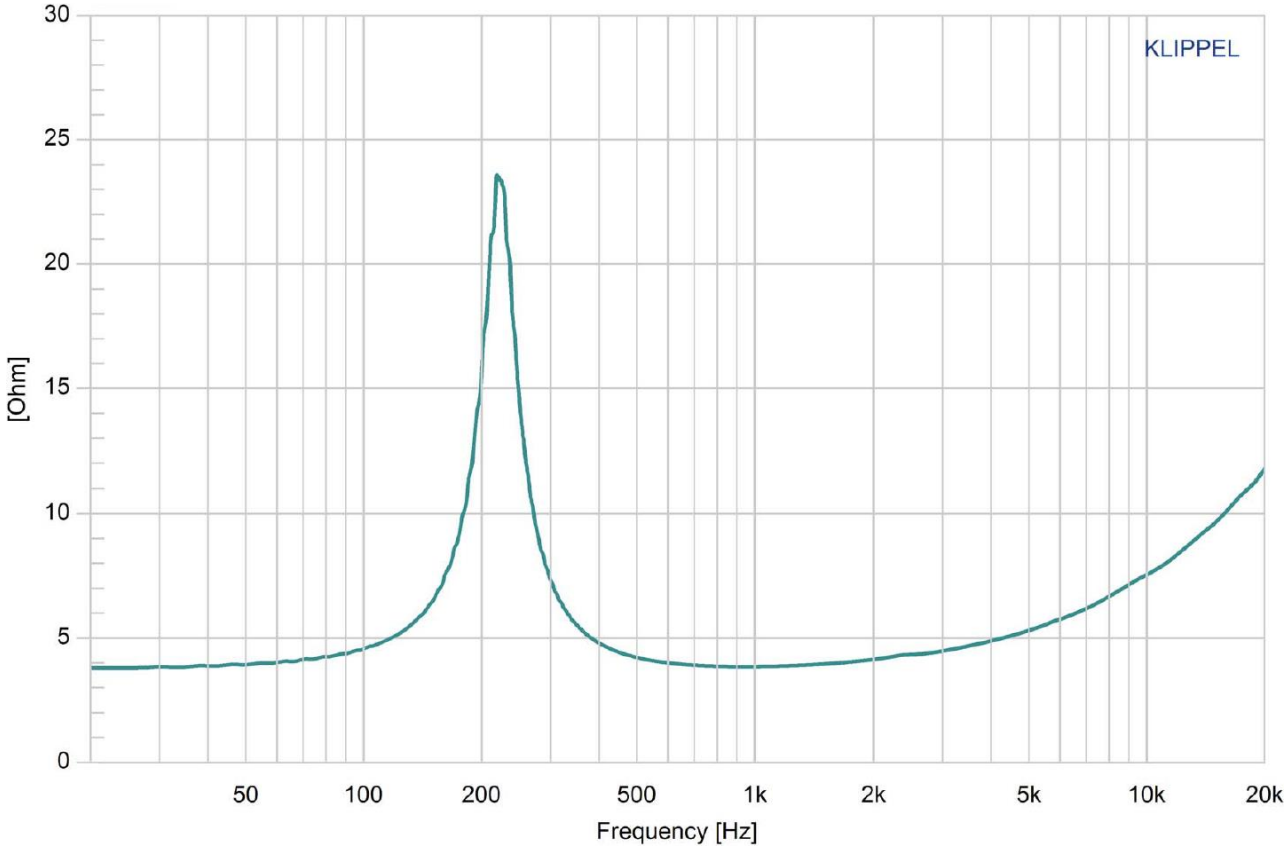

This document contains data proprietary to PUI Audio Inc. Any use or reproduction, in any form, without prior written permission of PUI Audio Inc. is prohibited.
©2024, PUI Audio Inc.

Reliability Testing

Type of Test	Test Specifications	Judgement
High Temperature Test GB2423.2-81	96 hours at +60°C ± 2°C followed by one hour in normal room temperature	SPL shall not deviate by ±3dB. Resonant frequency shall not deviate by ±50Hz. (compared with pre-test measurement)
Low Temperature Test GB2423.1-81	96 hours at -25°C ± 2°C followed by one hour in normal room temperature	
Humidity Test GB5170.18-87	96 hours at +40°C ± 2°C with relative humidity between 90% and 95% followed by 6 hours in normal room temperature	
Temperature Cycle Testing GB5170.18-87	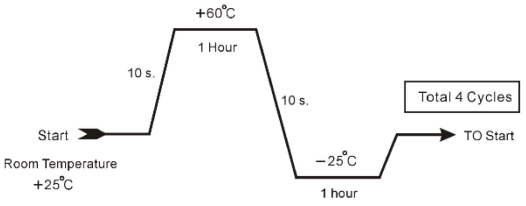	SPL shall not deviate by ±4dB. Resonant frequency shall not deviate by ±80Hz. (compared with pre-test measurement)
Vibration Test GB11606.8-89	Frequency 30±15 Hz, Amplitude 1.5 mm for 3 Hours	SPL shall not deviate by ±3dB. (compared with pre-test measurement)
Drop Test GB2423.8-81	75 cm free falling on concrete floor, 10 times.	
Load Test GB/T12060.5-2011	Speaker should not fail after applying 20Hz ~ 20kHz pink noise with HPF rated power input (RMS), 96 hours.	

Dimensions (Tolerance: ±0.5mm, unless otherwise specified.)

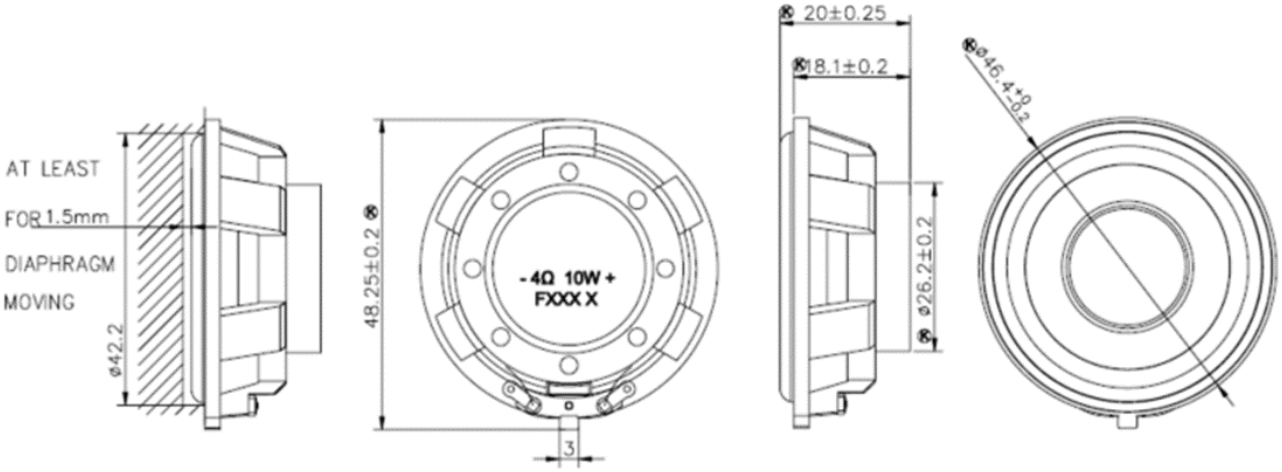

This document contains data proprietary to PUI Audio Inc. Any use or reproduction, in any form, without prior written permission of PUI Audio Inc. is prohibited.
©2024, PUI Audio Inc.

Packaging



NOTE
30 PCS per Layer
Total 13 Layer per box
Total 390 PCS per box
紙箱:38.5*32.5*36.5 cm
HF+ROHS 2

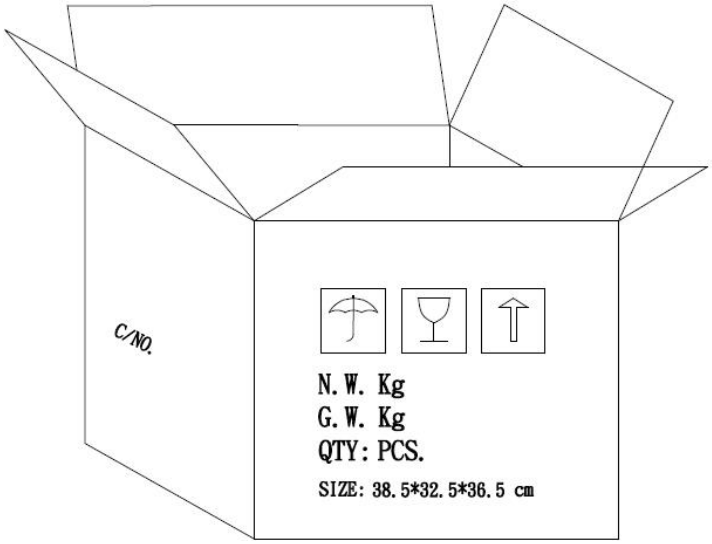

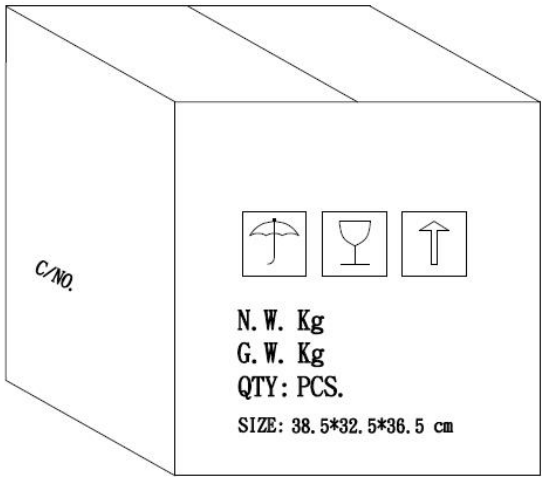

This document contains data proprietary to PUI Audio Inc. Any use or reproduction, in any form, without prior written permission of PUI Audio Inc. is prohibited.
©2024, PUI Audio Inc.

Measurement & Standard Reference

Abstract from GB/T 9396-1996 and IEC 268-5:1989: methods of measurement for main characteristics of loudspeakers.

5.1 Rated sine voltage.

A sinusoidal signal voltage specified by the manufacturer which makes the speaker work continuously in the rated frequency range, without causing electrical or mechanical damage to the speaker. The continuous voltage time is 1 hour.

5.2 Rated sine power.

The rated sine power corresponding with the rated sine voltage defined by: U_S^2/R, where U_s indicates the rated sin voltage and R indicates the rated impedance of the speaker.

5.3 Rated noise power.

The rated sine power corresponding with the rated sine voltage defined by: U_n^2/R, where U_n indicates the rated sin voltage and R indicates the rated impedance of the speaker.

Specifications Revisions

Revision	Description	Date	Approved
A	Released from Engineering	03/25/2024	KH

Notes:

1. Unless otherwise specified:
   A. All dimensions are in millimeters.
   B. Default tolerances are ±0.5mm and angles are ±3°.
2. Specifications subject to change or withdrawal without notice.