pui audio™ inc
a projects unlimited company

3541 Stop Eight Road • Dayton, Ohio 45414

AS07708PS-2-R
77mm Speaker

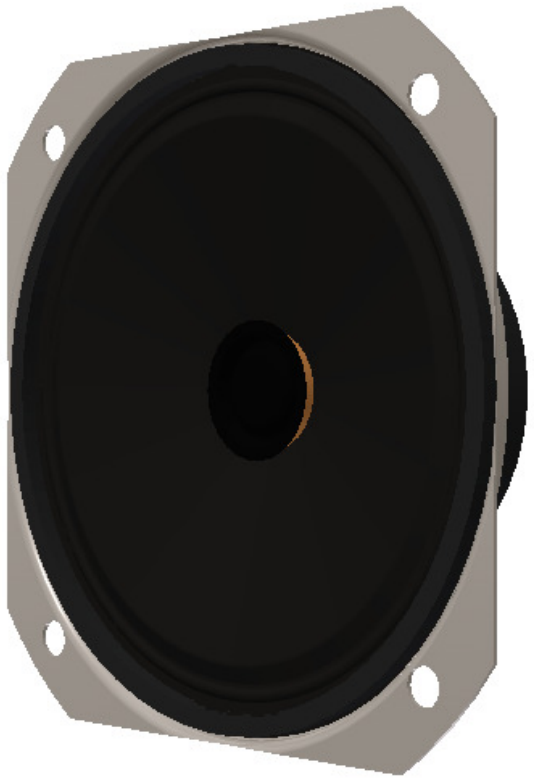

Product Overview

- 77mm speaker with square frame and 90 dB sensitivity
- 4W continuous, 8W maximum power handling and 8Ω impedance
- Paper cone for natural sound

Frequency Response (1W @ 0.5 meters)

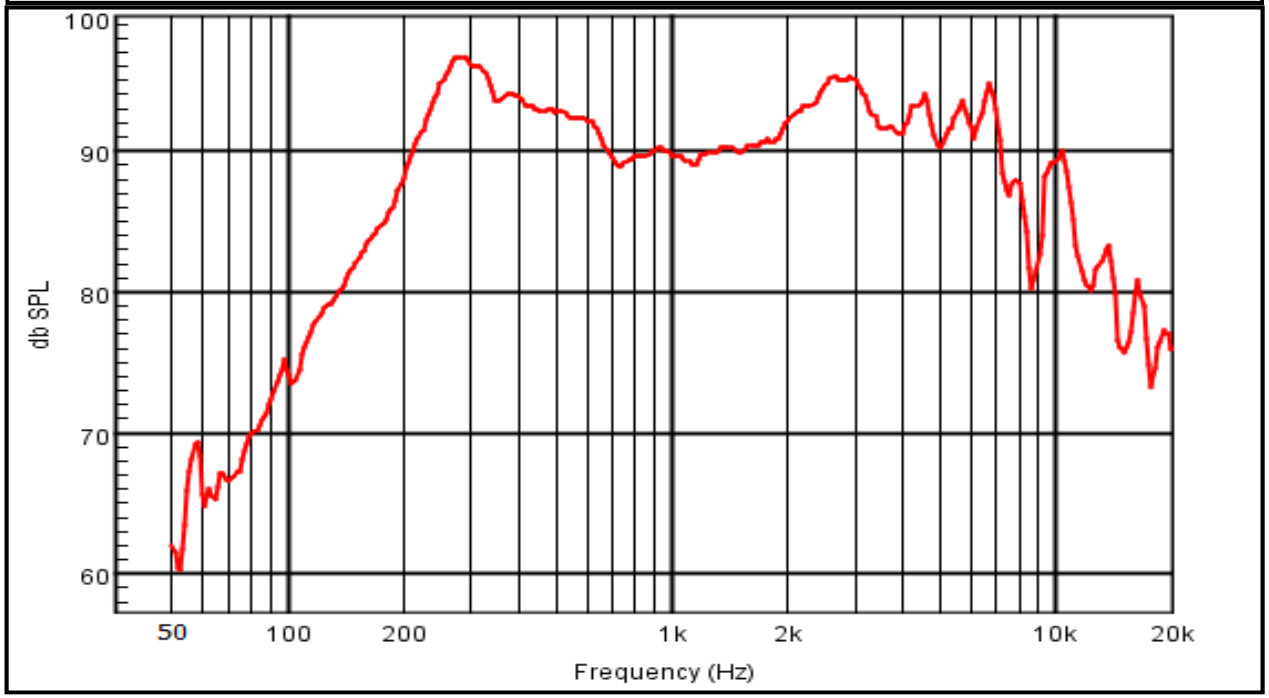

PUI Audio Inc. engages in continuous product improvement. All specifications are subject to change without notice. www.puiaudio.com. Copyright © 2015. Last Revised 12/15.

AS07708PS-2-R
77mm Speaker

Mechanical and Environment Testing	
Test Description	**Test Condition**
High Temperature	85°C (±2°C) with random humidity for 48 hours
Low Temperature	-40°C (±2°C) with random humidity for 48 hours
Humidity	40°C (±2°C) with 90% to 95% relative humidity for 48 hours
Power Test	White noise @ 4W input power for 48 hours
Buzz and Rattle Test	5.66V sine wave
After tests, speaker shall rest for 1 hour. SPL shall not deviate ±3 dB from pre-test measurement.	
Temperature Cycle Test	-10°C to 40°C, 4 cycles (refer to Temperature Cycle Test Graph)
After test, speaker shall rest for 1 hour. SPL shall not deviate ±3 dB from pre-test measurement.	

PUI Audio Inc. engages in continuous product improvement. All specifications are subject to change without notice. www.puiaudio.com. Copyright © 2015. Last Revised 12/15.

SPECIFICATIONS

PARAMETERS	VALUES	UNITS
RATED INPUT POWER	4	W
MAX INPUT POWER	8	W
IMPEDANCE	8 ± 15%	OHM
OUTPUT SPL @ 1W/0.5M (AT 0.4, 0.5, 0.6, 0.8 kHz)	90 ± 3	dBA
DISTORTION (MAX.)	5%	-
RESONANT FREQUENCY	250 ± 20%	Hz
FREQUENCY RANGE	250 ~ 10,000	Hz
HOUSING MATERIAL	METAL	-
CONE MATERIAL	PAPER	-
MAGNET MATERIAL	FERRITE	-
OPERATING TEMPERATURE	-40 ~ +85	°C
WEIGHT	118	grams

THIS DOCUMENT CONTAINS DATA PROPRIETARY TO PROJECTS UNLIMITED, INC. ANY USE OR REPRODUCTION, IN ANY FORM, WITHOUT PRIOR WRITTEN PERMISSION OF PROJECTS UNLIMITED, INC. IS PROHIBITED.

©2003, Projects Unlimited Inc.

REVISION HISTORY

LTR	DESCRIPTION	DATE	APPROVED
-	RELEASED FROM ENGINEERING	3/30/2006	
A	ADDED MOUNTING HOLE DIMENSION	12/19/2007	R.W.
B	REVISED TO INVENTOR 3-D DRAWING TEMPLATE	1/28/2009	B.R.
C	REVISED SEVERAL DIMENSIONS AND SPECIFICATIONS	1/24/2011	B.R.
D	REVISED HOLE TO HOLE DIMENSION AND ROHS STATUS	7/16/2013	M.L.
E	REVISED OPERATING TEMPERATURE	9/16/2013	M.L.

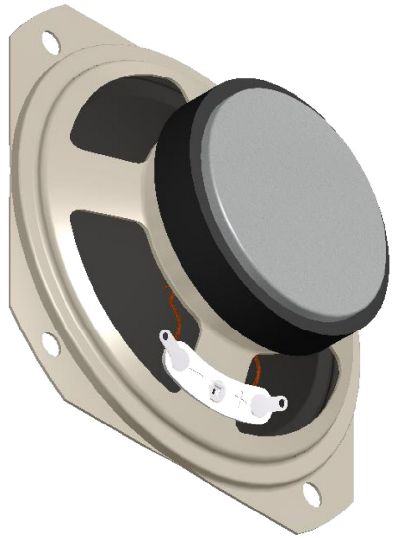

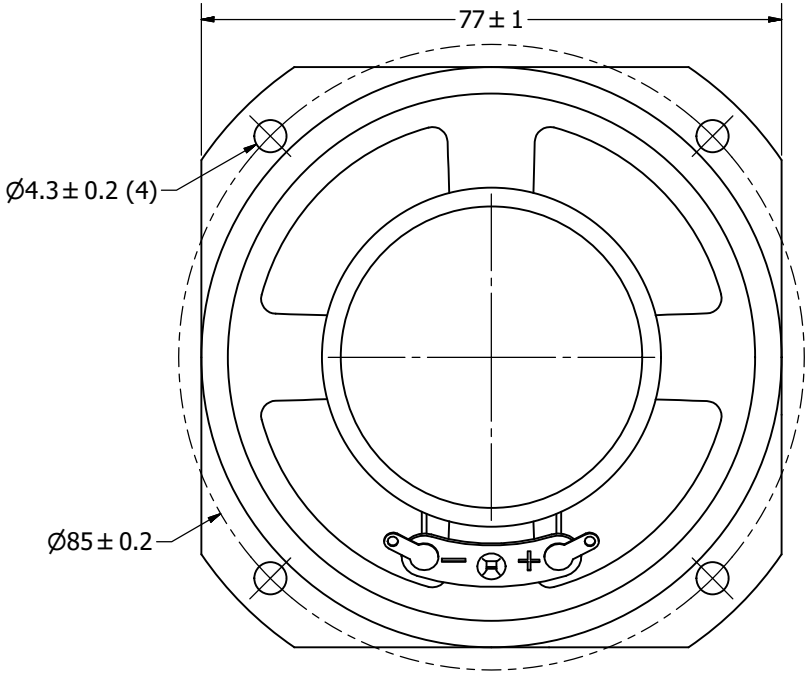

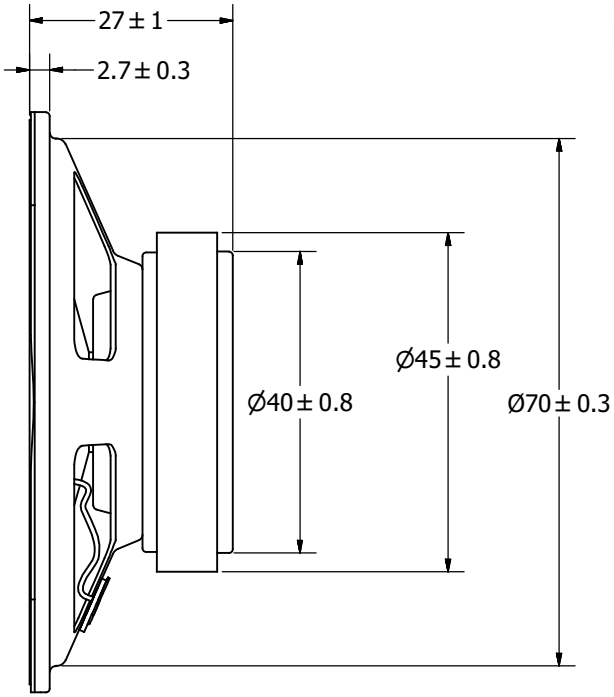

NOTES:

1. ALL DIMENSIONS ARE IN MILLIMETERS.
2. SPECIFICATIONS SUBJECT TO CHANGE OR WITHDRAWL WITHOUT NOTICE.
3. THIS PART IS RoHS 2011/65/EU COMPLIANT.

UNLESS OTHERWISE SPECIFIED: DIMENSIONS ARE IN MILLIMETERS, TOLERANCES ARE ±0.5 AND ANGLES ARE ±3°.	SIZE	Designed by	Date	Checked by	Date	Approved by	Date	Drawn Date
	A3	B.R.	3/30/2006	B.R.	3/30/2006	E.P.	3/30/2006	1/28/2009

AS07708PS-2-R.idw

pui audio inc — a projects unlimited company

AS07708PS-2-R

Speaker

Edition	Sheet
-	1 / 1