SPECIFICATIONS

PARAMETERS	VALUES	UNIT
RATED VOLTAGE	1.5	Vp-p
OPERATING VOLTAGE RANGE	1 ~ 3	Vp-p
RATED CURRENT (MAX)	10	mA
COIL RESISTANCE	50 ± 7.5	OHM
MINIMUM SPL @ 10 CM	73	dBA
RESONANT FREQUENCY	2,048 ± 500	Hz
OPERATING TEMPERATURE	-20 ~ +70	°C
STORAGE TEMPERATURE	-30 ~ +85	°C
HOUSING MATERIAL	NORYL	-
TERMINAL MATERIAL	Sn PLATED COPPER	-
WEIGHT	2	grams

THIS DOCUMENT CONTAINS DATA PROPRIETARY TO PROJECTS UNLIMITED, INC. ANY USE OR REPRODUCTION, IN ANY FORM, WITHOUT PRIOR WRITTEN PERMISSION OF PROJECTS UNLIMITED, INC. IS PROHIBITED.
©2003, Projects Unlimited Inc.

REVISION HISTORY

LTR	DESCRIPTION	DATE	APPROVED
-	RELEASED FROM ENGINEERING	1/04/2005	
A	CHANGED PART No.	1/06/2005	R.W.
B	REMOVED LEAD FREE ADDED RoHS NOTE	8/10/2005	
C	REVISED TO INVENTOR 3-D DRAWING TEMPLATE	5/07/2008	B.R.



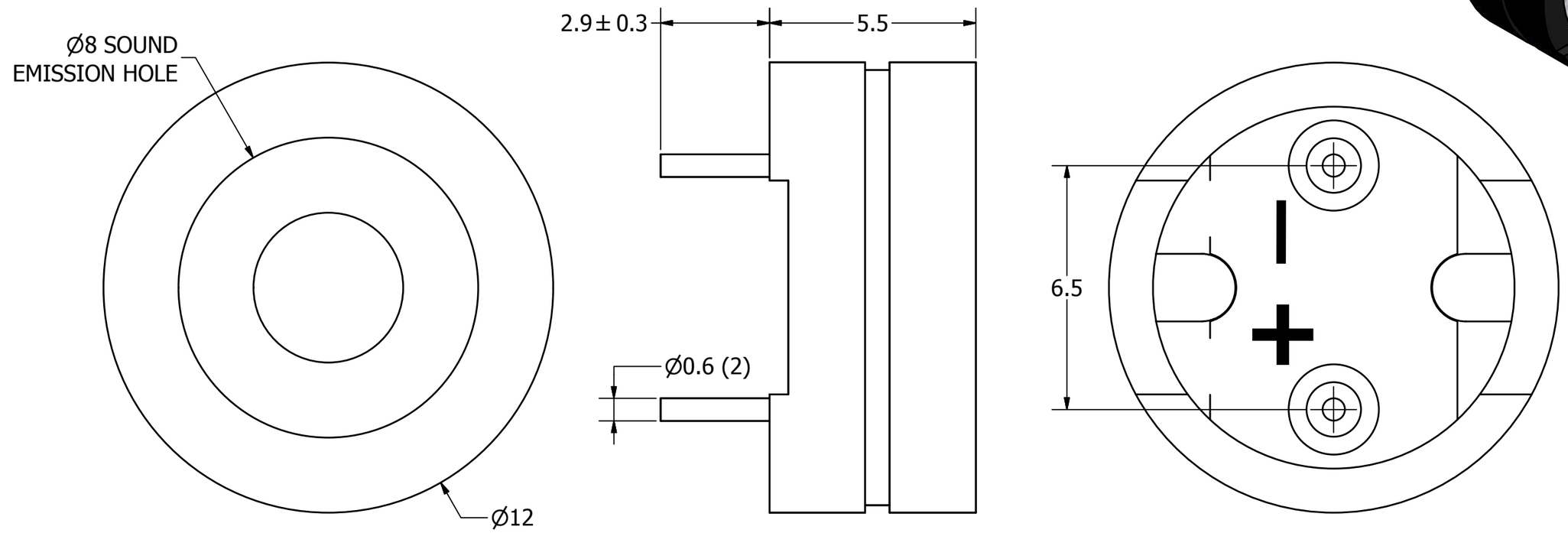

NOTES:

1. ALL DIMENSIONS ARE IN MILLIMETERS.
2. SPECIFICATIONS SUBJECT TO CHANGE OR WITHDRAWL WITHOUT NOTICE.
3. THIS PART IS RoHS 2002/95/EC COMPLIANT.

UNLESS OTHERWISE SPECIFIED: DIMENSIONS ARE IN MILLIMETERS, TOLERANCES ARE ±0.5 AND ANGLES ARE ±3°.	SIZE A3	Designed by	Date	Checked by	Date	Approved by	Date	Drawn Date
		R.A.C.	1/4/2005	B.R.	1/4/2005	R.W.	1/4/2005	5/7/2008
AT-1220-TT-3-R.idw		pui audio inc a projects unlimited company	AT-1220-TT-3-R					
			Transducer (Electro-Mech)			Edition -	Sheet 1 / 1	