SPECIFICATIONS		
PARAMETERS	VALUES	UNITS
RATED VOLTAGE	5	Vp-p
OPERATING VOLTAGE RANGE	1 ~ 30	Vp-p
RATED CURRENT (MAX)	3	mA
CAPACITANCE	14,000 ± 30%	pF
MINIMUM SPL @ 10 CM	80	dBA
RESONANT FREQUENCY	4,000 ± 500	Hz
OPERATING TEMPERATURE	-20 ~ +60	°C
STORAGE TEMPERATURE	-30 ~ +70	°C
HOUSING MATERIAL	ABS	-
TERMINAL MATERIAL	Sn PLATED COPPER	-
WEIGHT	2	grams

THIS DOCUMENT CONTAINS DATA PROPRIETARY TO PROJECTS UNLIMITED, INC. ANY USE OR REPRODUCTION, IN ANY FORM, WITHOUT PRIOR WRITTEN PERMISSION OF PROJECTS UNLIMITED, INC. IS PROHIBITED.
©2003, Projects Unlimited Inc.

REVISION HISTORY			
LTR	DESCRIPTION	DATE	APPROVED
-	RELEASED FROM ENGINEERING	9/26/2006	
A	REVISED APPEARANCE OF PART	12/10/2007	R.W.
B	REVISED TO INVENTOR 3-D DRAWING TEMPLATE	4/10/2008	B.R.



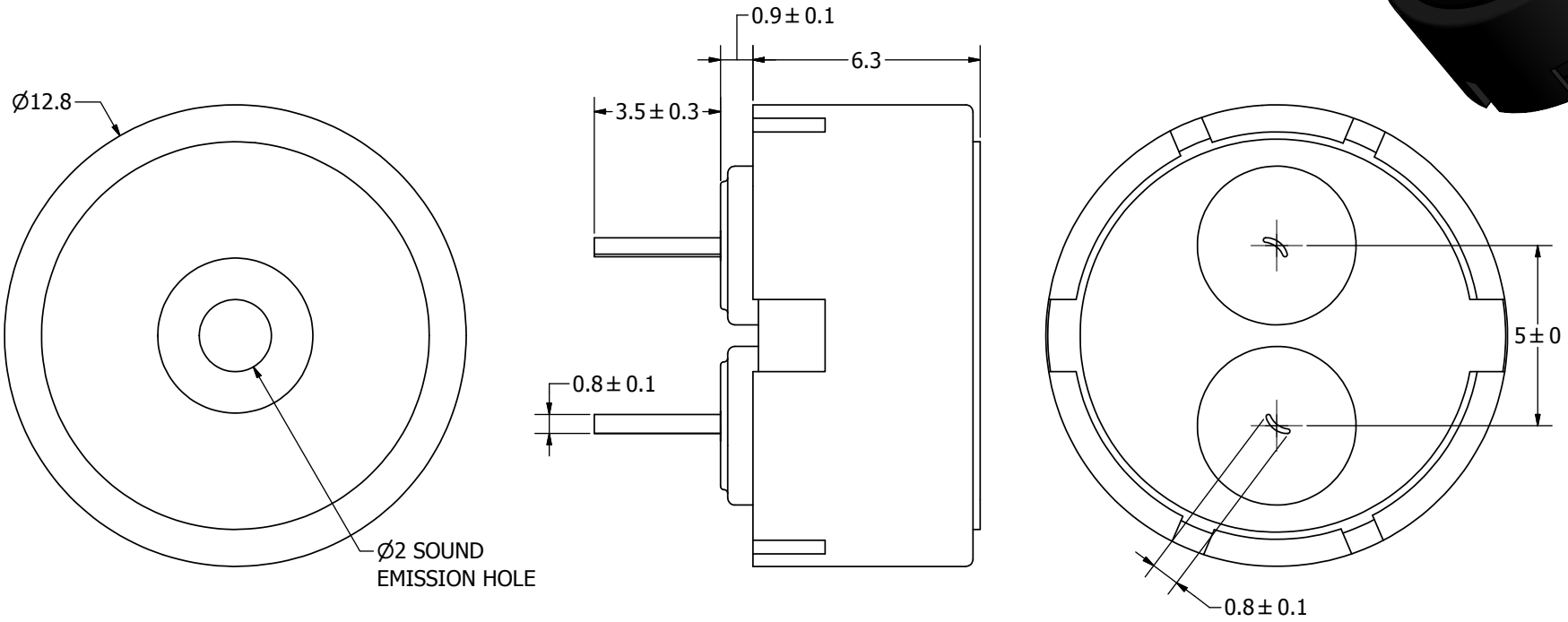

NOTES:

1. ALL DIMENSIONS ARE IN MILLIMETERS.
2. SPECIFICATIONS SUBJECT TO CHANGE OR WITHDRAWL WITHOUT NOTICE.
3. THIS PART IS RoHS 2002/95/EC COMPLIANT.

UNLESS OTHERWISE SPECIFIED: DIMENSIONS ARE IN MILLIMETERS, TOLERANCES ARE ±0.5 AND ANGLES ARE ±3°.	SIZE A3	Designed by	Date	Checked by	Date	Approved by	Date	Drawn Date
AT-1340-TT-R.idw		J.D.	9/26/2006	R.W.	9/26/2006	B.R.	9/26/2006	4/10/2008

pui audio — A Division of Projects Unlimited

AT-1340-TT-R

Transducer (Piezo)

Edition: -

Sheet: 1 / 1