THIS DOCUMENT CONTAINS DATA PROPRIETARY TO PROJECTS UNLIMITED, INC. ANY USE OR REPRODUCTION, IN ANY FORM, WITHOUT PRIOR WRITTEN PERMISSION OF PROJECTS UNLIMITED, INC. IS PROHIBITED.
© 2005, Projects Unlimited Inc.

SPECIFICATIONS

PARAMETERS	VALUES	UNITS
DIRECTIVITY	OMNI	–
SENSITIVITY	−44±3	dB
STANDARD OPERATING VOLTAGE	2	Vdc
MAX OPERATING VOLTAGE	10	Vdc
CURRENT CONSUMPTION (MAX)	0.5	mA
IMPEDANCE	2.2	KOhm
SIGNAL TO NOISE RATIO (MIN.)	60	dB
TERMINAL	SOLDER PADS	–
INTERNAL CAPACITOR	N/A	pF

REVISIONS

LTR	DESCRIPTION	DATE	APPROVED
–	RELEASED FROM ENGINEERING	1/26/06	

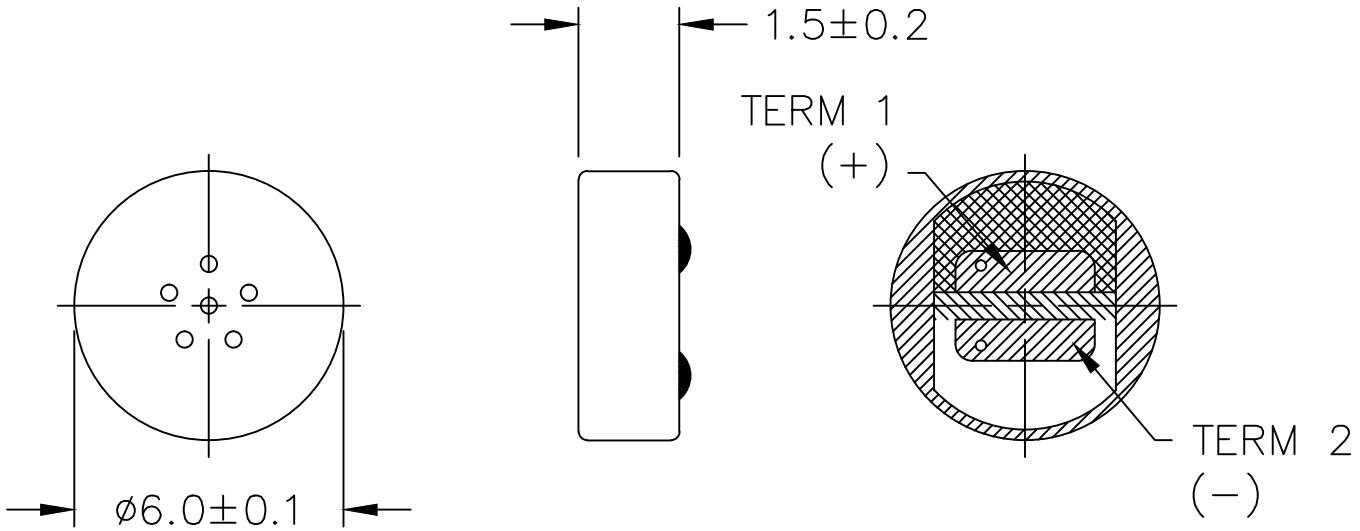

NOTES:

1. ALL DIMENSIONS ARE IN MILLIMETERS.
2. SPECIFICATION SUBJECT TO CHANGE OR WITHDRAWAL WITHOUT NOTICE.
3. THIS PART IS RoHS 2002/95/EC COMPLIANT.

FILE NAME
POM−1644L−NF−R.DWG

UNLESS OTHERWISE SPECIFIED: DIMENSIONS ARE IN MILLIMETERS, TOLERANCES ARE ±0.5 AND ANGLES ARE ±3°.

APPROVALS		DATE
DRAWN	J.A.F.	01/06
CHECKED	E.P.	01/06
APPROVED	B.R.	01/06

DO NOT SCALE DRAWING

projects unlimited Dayton , Ohio

MICROPHONE

SIZE A | DRAWING NO. POM−1644L−NF−R

SCALE: N.T.S. | SHEET 1 OF 1