This document contains data proprietary to PUI Audio Inc. Any use or reproduction, in any form, without prior written permission of PUI Audio Inc. is prohibited.
©2019, PUI Audio Inc.

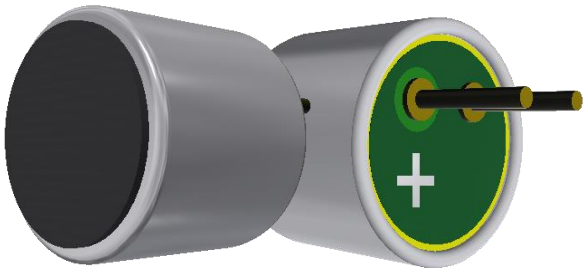

Data Sheet	POM-5046P-C3310-R

PUI Audio's omnidirectional electret condenser microphones (ECMs) capture sound from all directions with a 360° polar pattern.

Excellent for conference phone recording, these microphones are best suited for applications where the directionality of the acoustic source, with relation to the microphone, may be unknown or when placed centrally among multiple acoustic sources.

Features:

- 6mm diameter
- 5mm height
- -46 dB sensitivity @ 50cm
- >55 dB signal-to-noise ratio
- Circular polar pattern to capture all sounds equally well regardless of placement
- Integrated 33pF and 10pF buzz-blocking capacitors reduce GSM noise

Specifications

Parameters	Values	Units
Sensitivity (1 kHz @ 50cm) 0 dB=1V/Pa	-46 ±3	dB
Rated Voltage	2	VDC
Output Impedance (@ 1 kHz)	0.68	kΩ
Current consumption (3VS with 2.2 kΩ RL)	500	µA
Signal-to-Noise Ratio (1kHz, 94 dB input, A-weighted)	>55	dB
Decreasing Voltage (2VS to 1.5VS)	-3	dB
Frequency Range (@ 50cm, -10 dB)	20 ~ 20,000	Hz
Operating Voltage Range	1 ~ 10	VDC
Maximum SPL Input (THD<3%)	110	dB
Directivity	Omnidirectional	-
Operating Temperature	-20 ~ +60	°C
Storage Temperature	-40 ~ +70	°C
Weight	<0.3	Grams

PUI Audio, Inc., 3541 Stop Eight Road, Dayton, OH 45414
Tel: (937) 415-5901 Fax: (937) 415-5925

This document contains data proprietary to PUI Audio Inc. Any use or reproduction, in any form, without prior written permission of PUI Audio Inc. is prohibited.
©2019, PUI Audio Inc.

Measurement Method (in Anechoic Chamber)

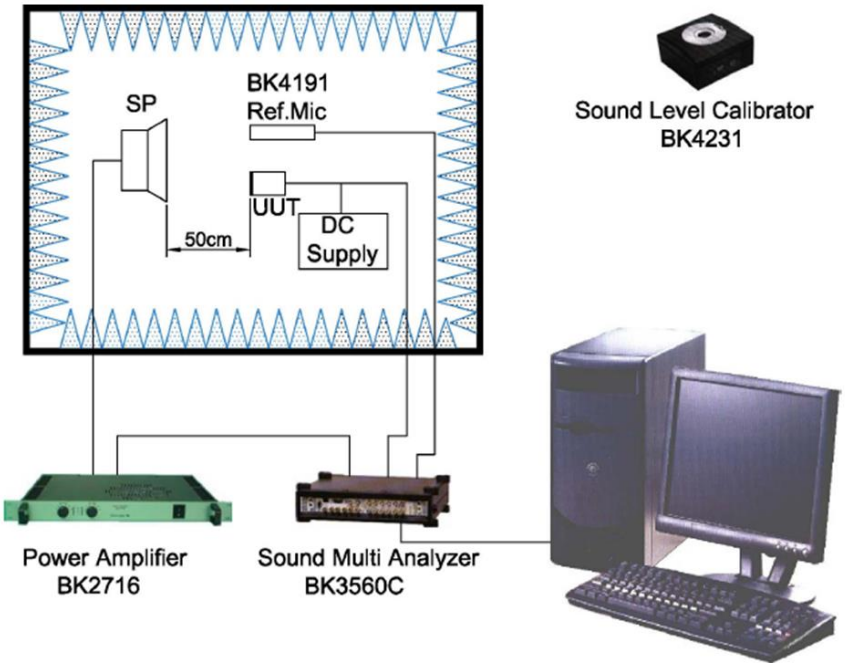

Typical Frequency Response (measured at 50cm with 2V input and 94 dB source)

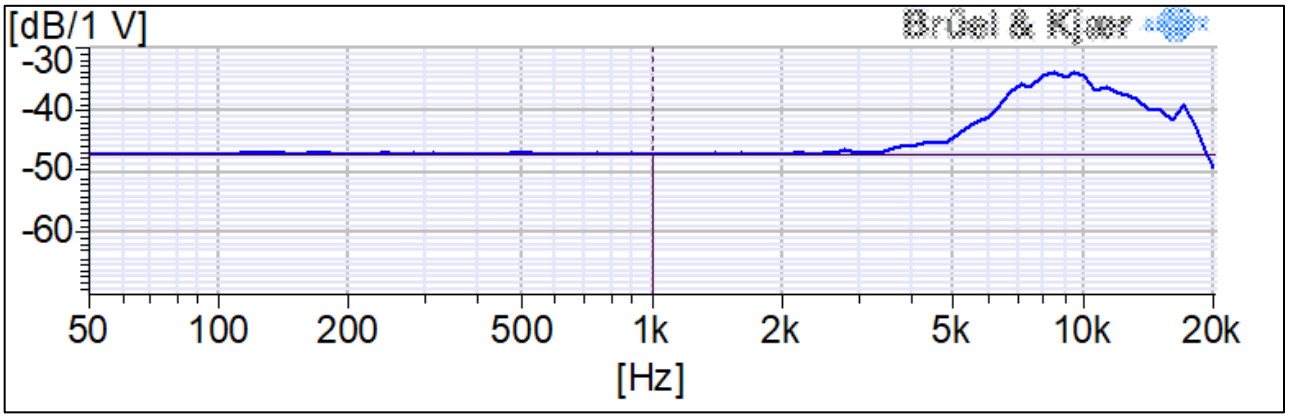

Frequency Response Mask (for pass/fail testing)

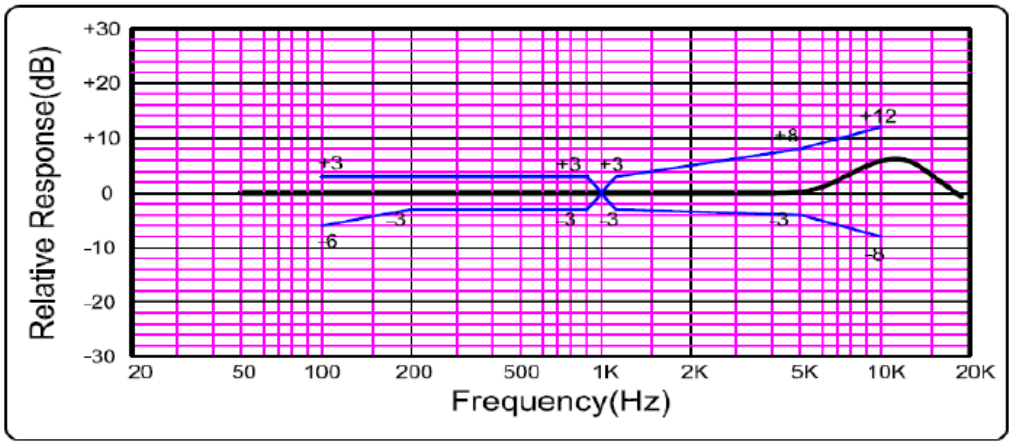

PUI Audio, Inc., 3541 Stop Eight Road, Dayton, OH 45414
Tel: (937) 415-5901 Fax: (937) 415-5925

This document contains data proprietary to PUI Audio Inc. Any use or reproduction, in any form, without prior written permission of PUI Audio Inc. is prohibited.
©2019, PUI Audio Inc.

Reliability Testing

Type of Test	Test Specifications
High Temperature Test	200 hours at +60°C ± 3°C followed by two hours in normal room temperature
Low Temperature Test	200 hours at -20°C ± 3°C followed by two hours in normal room temperature
Humidity Test	200 hours at +40°C ± 3°C with relative humidity at 90% to 95% followed by 2 hours in normal room temperature
Temperature Cycle Testing	30 minutes at -25°C, 10 minutes at 20°C, 30 minutes at +70°C, 10 minutes at 20°C for five cycles, followed by 2 hours in normal room temperature
Vibration Test	10 to 55 Hz for 1 minute with 1.52mm distance, followed by a two-hour 3 axis test in packaging
Drop Test	Drop microphones in packaging onto concrete floor from 1-meter height in each of 3-axis
ESD Test (according to IEC 6100)	1. Contact discharge - Discharge 6000 VDC from capacitor into microphone output through 330Ω resistor ten times. 2. Air discharge - Discharge 8000 VDC into sound hole of the microphone ten times.

After each test, the speaker's SPL shall be ±3 dB of the original SPL

Dimensions

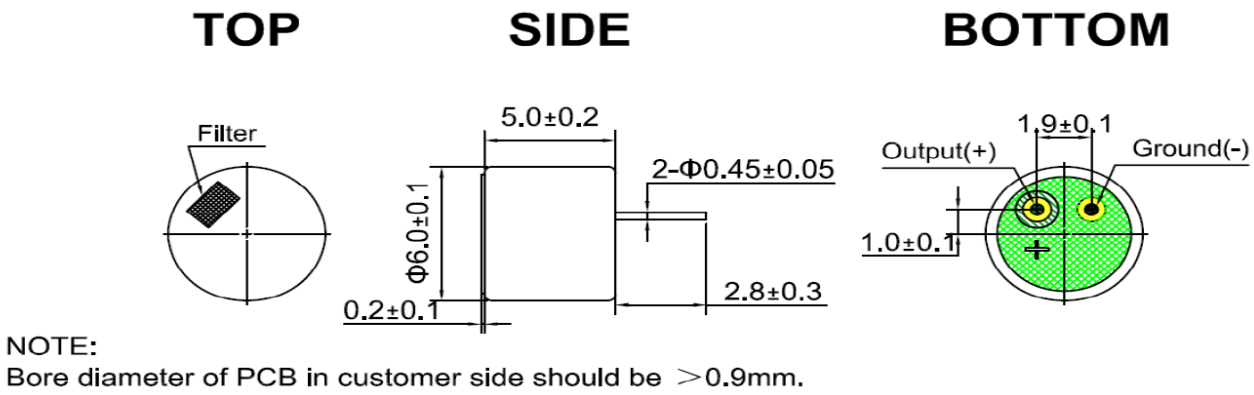

NOTE:
Bore diameter of PCB in customer side should be ＞0.9mm.

Recommended Drive Circuit

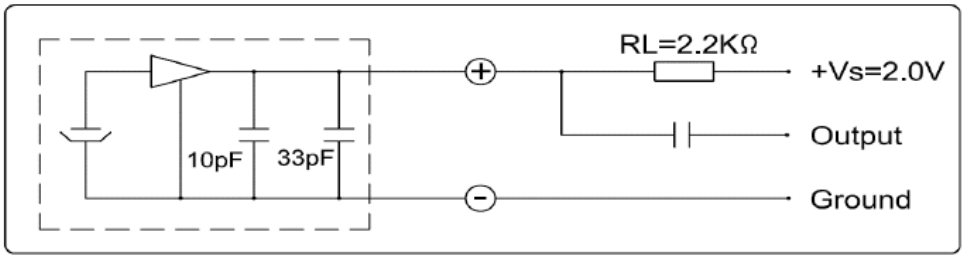

PUI Audio, Inc., 3541 Stop Eight Road, Dayton, OH 45414
Tel: (937) 415-5901 Fax: (937) 415-5925

This document contains data proprietary to PUI Audio Inc. Any use or reproduction, in any form, without prior written permission of PUI Audio Inc. is prohibited.
©2019, PUI Audio Inc.

Microphone Handling Precautions

High temperature and/or static electricity may damage microphones. To ensure careful handling, we suggest following these precautions:

- Ensure the power rating of the soldering iron is below 90 watts
- The temperature of the soldering iron must be limited to 360°C ±10°C (680°F ±50°F)
- Soldering duration for each terminal shall be at or under 2 seconds
- If practical, use a metal fixture to hold the microphone in-place and to act as a heatsink. A fixture should have appropriate diameter holes drilled through the entire fixture to prevent pressure from being placed on the diaphragm (as below)



PUI Audio, Inc., 3541 Stop Eight Road, Dayton, OH 45414
Tel: (937) 415-5901 Fax: (937) 415-5925

This document contains data proprietary to PUI Audio Inc. Any use or reproduction, in any form, without prior written permission of PUI Audio Inc. is prohibited.
©2019, PUI Audio Inc.

Specifications Revisions

Revision	Description	Date
-	Released from Engineering	9/4/2018

Note:
1. Unless otherwise specified:
   A. All dimensions are in millimeters.
   B. Default tolerances are ±0.5mm and angles are ±3°.
2. Specifications subject to change or withdrawal without notice.
3. This part is RoHS 2011/65/EU Compliant.

PUI Audio, Inc., 3541 Stop Eight Road, Dayton, OH 45414
Tel: (937) 415-5901 Fax: (937) 415-5925