SPECIFICATIONS

PARAMETERS	VALUES	UNITS
RATED INPUT POWER	0.3	W
MAX INPUT POWER	0.5	W
IMPEDANCE	8 ± 15%	OHM
OUTPUT SPL @ 0.3W/10cm (AT 1.0, 1.2, 1.5, 2.0 kHz)	87 ± 3	dBA
DISTORTION (MAX.)	10%	-
RESONANT FREQUENCY	850 ± 20%	Hz
FREQUENCY RANGE	850 ~ 20,000	Hz
HOUSING MATERIAL	PPS	-
CONE MATERIAL	MYLAR	-
MAGNET MATERIAL	SmCo	-
OPERATING TEMPERATURE	-40 ~ +85	°C
WEIGHT	2.1	grams

THIS DOCUMENT CONTAINS DATA PROPRIETARY TO PROJECTS UNLIMITED, INC. ANY USE OR REPRODUCTION, IN ANY FORM, WITHOUT PRIOR WRITTEN PERMISSION OF PROJECTS UNLIMITED, INC. IS PROHIBITED.
©2003, Projects Unlimited Inc.

REVISION HISTORY

LTR	DESCRIPTION	DATE	APPROVED
-	RELEASED FROM ENGINEERING	4/28/2005	
A	REMOVED LEAD FREE ADDED RoHS NOTE	8/10/2005	
B	REVISED TO INVENTOR 3-D DRAWING TEMPLATE	4/7/2008	B.R.
C	REVISED DIMENSIONS	9/1/2010	B.R.

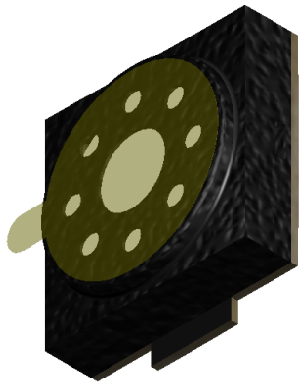

PART IS NOT WASHABLE

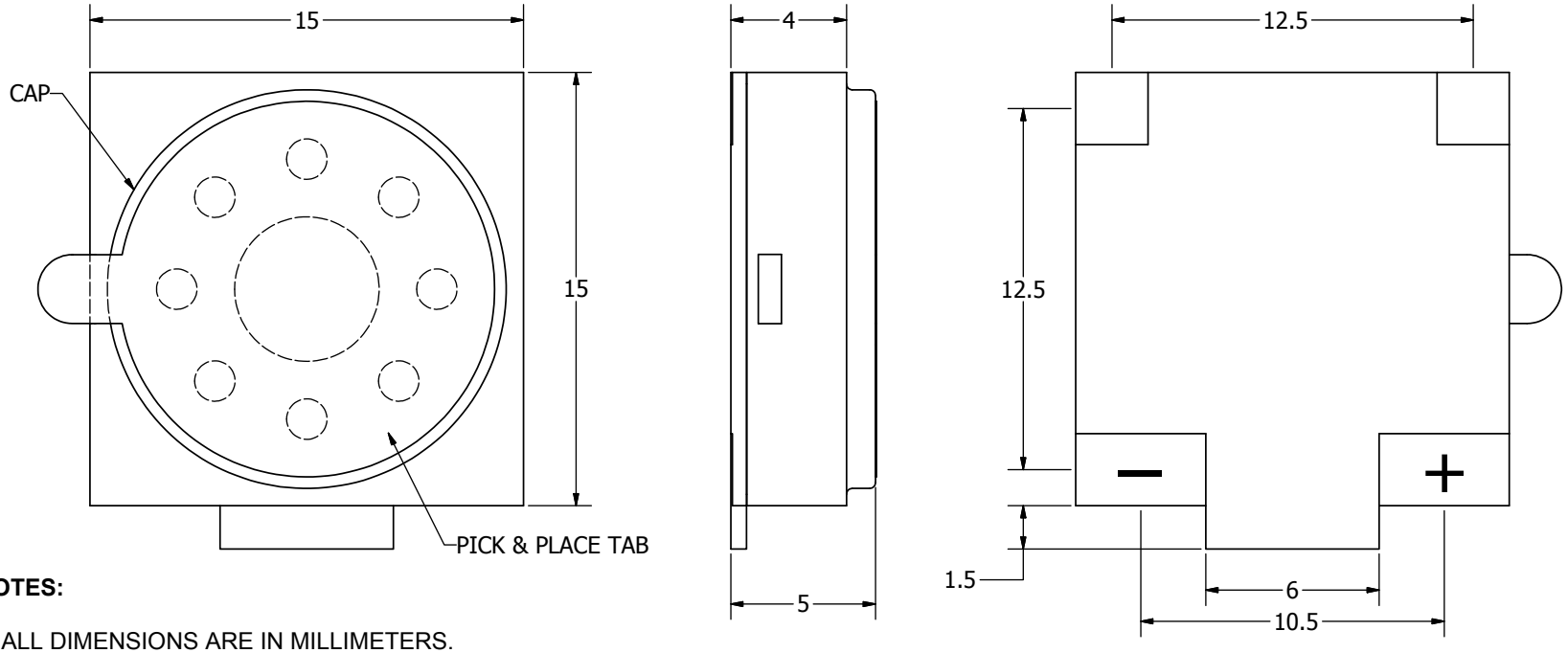

NOTES:

1. ALL DIMENSIONS ARE IN MILLIMETERS.
2. SPECIFICATIONS SUBJECT TO CHANGE OR WITHDRAWL WITHOUT NOTICE.
3. PART IS NOT WASHABLE.
4. THIS PART IS RoHS 2002/95/EC COMPLIANT.

UNLESS OTHERWISE SPECIFIED: DIMENSIONS ARE IN MILLIMETERS, TOLERANCES ARE ±0.5 AND ANGLES ARE ±3°.	SIZE A3	Designed by	Date	Checked by	Date	Approved by	Date	Drawn Date
SMS-1508-2-R.idw		R.A.C.	4/28/2005			R.W.	4/28/2005	4/7/2008

pui audio inc — a projects unlimited company

SMS-1508-2-R

Surface Mount Speaker

Edition	Sheet
-	1 / 1