THIS DOCUMENT CONTAINS DATA PROPRIETARY TO PROJECTS UNLIMITED, INC. ANY USE OR REPRODUCTION, IN ANY FORM, WITHOUT PRIOR WRITTEN PERMISSION OF PROJECTS UNLIMITED, INC. IS PROHIBITED.
© 2005, Projects Unlimited Inc.

SPECIFICATIONS

PARAMETERS	VALUES	UNITS
RATED INPUT POWER	1.0	W
MAX INPUT POWER	1.5	W
IMPEDANCE	45±15%	OHM
OUTPUT SPL @ 1.5W/0.1M (AT 0.6, 0.8, 1.0, 1.2kHz)	97±3	dBA
DISTORTION (MAX.)	5%	–
RESONANT FREQUENCY	350±20%	Hz
FREQUENCY RANGE	230 ~ 15,000	Hz
HOUSING MATERIAL	METAL	–
CONE MATERIAL	MYLAR	–
MAGNET MATERIAL	NdFeB	–
OPERATING TEMPERATURE	−20 ~ +60	℃
WEIGHT	11.6	grams

REVISIONS

LTR	DESCRIPTION	DATE	APPROVED
–	RELEASED FROM ENGINEERING	11/9/15	
A	REVISED SPL FROM 102dB TO 97dB	5/27/16	M.L.

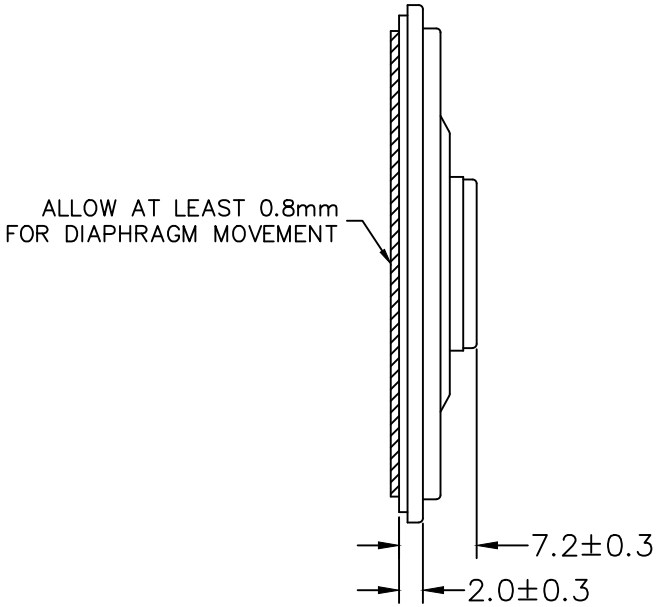

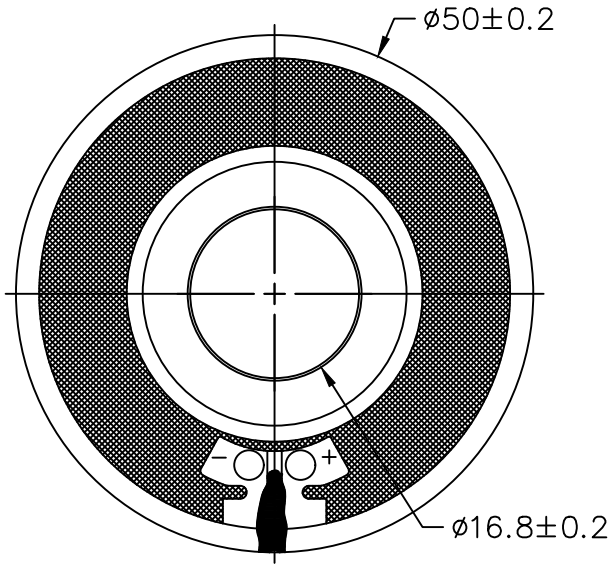

NOTES:

1. ALL DIMENSIONS ARE IN MILLIMETERS.
2. SPECIFICATION SUBJECT TO CHANGE OR WITHDRAWAL WITHOUT NOTICE.
3. THIS PART IS RoHS 2011/65/EU COMPLIANT.

FILE NAME
AS05045MR−R.DWG

UNLESS OTHERWISE SPECIFIED:

ALL PURCHASES ARE SUBJECT TO THE PUI AUDIO TERMS AND CONDITIONS SALE FOUND AT http://www.puiaudio.com/pdf/terms_conditions.pdf (paper copy available upon request).

DIMENSIONS ARE IN MILLIMETERS,TOLERANCES ARE ±0.5 AND ANGLES ARE ±3°.

U:\Product Management\Drawings\Master\PUI Audio Inc Logo for AutoCAD.bmp

3541 Stop Eight Road
Dayton, Ohio 45414

APPROVALS		DATE
DRAWN	M.L.	11/15
CHECKED	M.L.	11/15
APPROVED	B.R.	11/15

SPEAKER

SIZE A | DRAWING NO. AS05045MR−R

SCALE: N.T.S. | SHEET 1 OF 1