SPECIFICATIONS

PARAMETERS	VALUES	UNITS
RATED VOLTAGE	12	Vp-p
OPERATING VOLTAGE RANGE	1 ~ 30	Vp-p
RATED CURRENT (MAX)	5	mA
CAPACITANCE	19,000 ± 30%	pF
MINIMUM SPL @ 10 CM	90	dBA
RESONANT FREQUENCY	4,000 ± 500	Hz
OPERATING TEMPERATURE	-30 ~ +70	°C
STORAGE TEMPERATURE	-30 ~ +85	°C
HOUSING MATERIAL	PPS	-
TERMINAL MATERIAL	Au-plated Brass	-
WEIGHT	4.0	grams

THIS DOCUMENT CONTAINS DATA PROPRIETARY TO PROJECTS UNLIMITED, INC. ANY USE OR REPRODUCTION, IN ANY FORM, WITHOUT PRIOR WRITTEN PERMISSION OF PROJECTS UNLIMITED, INC. IS PROHIBITED.
©2003, Projects Unlimited Inc.

REVISION HISTORY

LTR	DESCRIPTION	DATE	APPROVED
-	RELEASED FROM ENGINEERING	3/8/2016	
A	REVISED WEIGHT AND TERMINAL MATERIAL	3/2/2020	M.V.



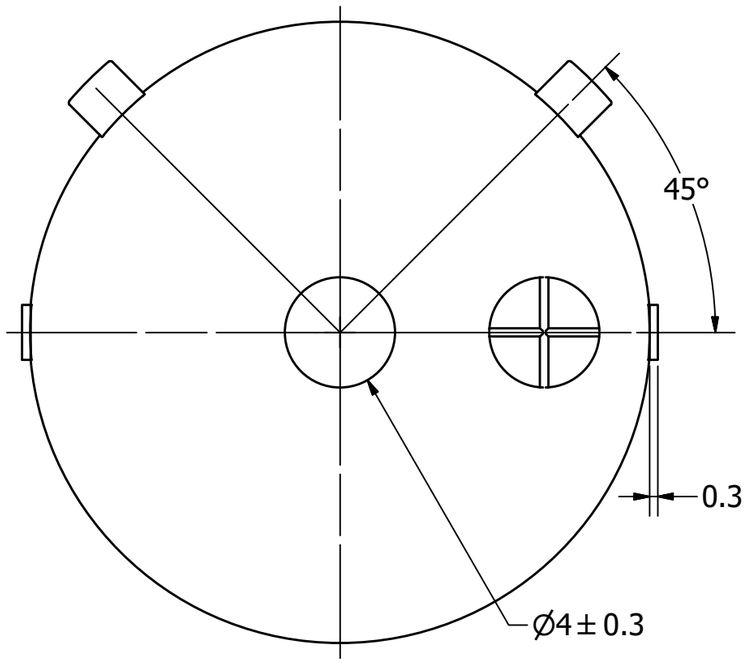

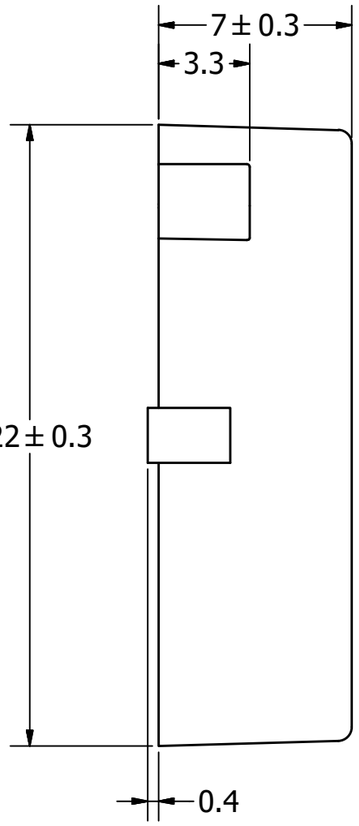

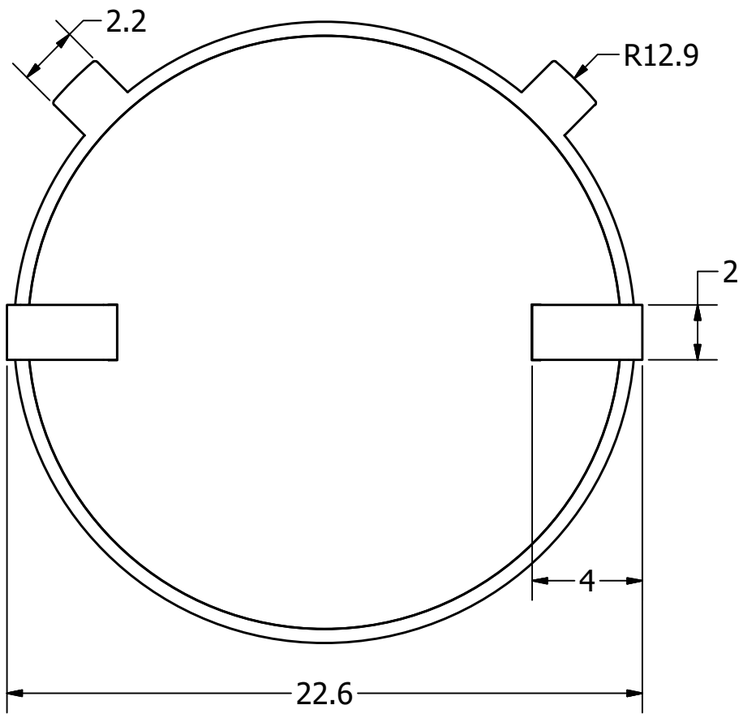

NOTES:

1. ALL DIMENSIONS ARE IN MILLIMETERS.
2. SPECIFICATIONS SUBJECT TO CHANGE OR WITHDRAWL WITHOUT NOTICE.
3. THIS PART IS RoHS 2011/65/EU COMPLIANT.

UNLESS OTHERWISE SPECIFIED: DIMENSIONS ARE IN MILLIMETERS, TOLERANCES ARE ±0.5 AND ANGLES ARE ±3°.	SIZE	Designed by	Date	Checked by	Date	Approved by	Date	Drawn Date
		J.A.F.	3/8/2016	B.R.	3/8/2016	E.P.	3/8/2016	3/8/2016

SMT-2240-TW-2-R.idw

pui audio inc

SMT-2240-TW-2-R

Transducer (Piezo)

Edition	Sheet
-	1 / 1