Surface Mount Common Mode Chokes

Suited for LAN and Telecom WAN Applications

Pulse a YAGEO company

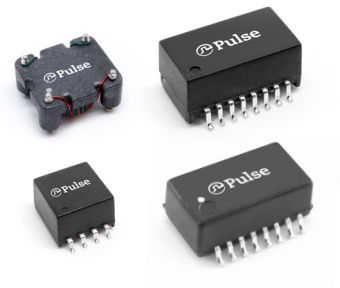

- *Open MSL1 or moulded MSL4 construction designs available*
- *Reduces radiated EMI emissions and common mode EMC noise*
- *Common mode attenuation from 100 KHz to 1 GHz*
- *Extended Temperature operating range -40 to +85°C*
- *JEDEC - IR Reflow solder peak temperature 245°C*
- *Supplied in Tube or on 13" Tape and Reel*

Low Frequncy Chokes			Electrical Specifications @ 25°C										
Part Number [1]	No. of Lines	Inductance (µH MIN)	Common Mode Attenuation (dB TYP)									DCR (Ω MAX)	Primary Appication
			1 KHz	10 KHz	100 KHz	1 MHz	10 MHz	30 MHz	50 MHz	80 MHz	100 MHz		
PE-65855NL	2	4,700 +/-30%	16	23	41	43	48	39	34	29	26	1.0	WAN / xDSL
B2013NL	2	9,000 +/-30%	26	43	46	47	43	32	25	24	29	1.0	WAN / xDSL
BX8333NL	2	16,000 +/-35%	33	36	38	36	22	15	12	10	8	1.65	WAN / xDSL
BX8333DNL	2	33,000 +/-35%	42	48	46	22	15	12	8	7	6	2.3	WAN / xDSL

1. For Tape & Reel packaging, add suffix "**T**" to the end of the part number e.g. B2013NL**T**
All Parts conform to JEDEC-J-STD for Moisture Sensitivity Level 1

MECHANICALS

B2013NL

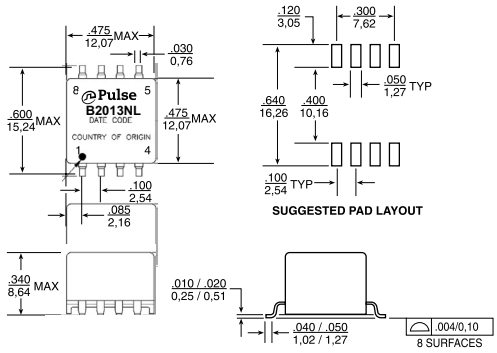

Dimensions: Inches / mm

Unless otherwise specified, all tolerances are ± .010 / 0,25

Weight ..... 1.28 grams
Tape & Reel 250/reel
Tube .....40 pcs

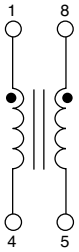

PE-65855NL, BX8333NL, BX8333DNL

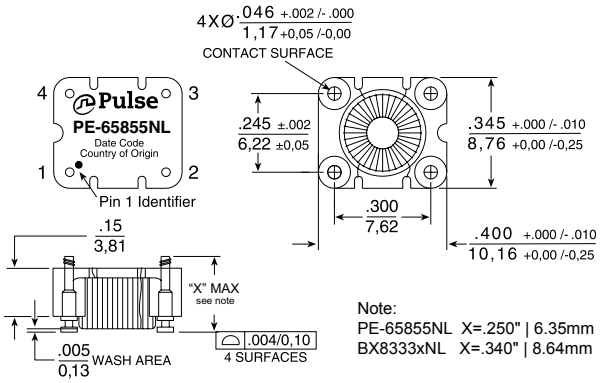

Note:
PE-65855NL X=.250" | 6.35mm
BX8333xNL X=.340" | 8.64mm

Dimensions: Inches / mm

Unless otherwise specified, all tolerances are ± .010 / 0,25

Weight .....0.74 grams
Tape & Reel 450/reel
Tube .....40 pcs

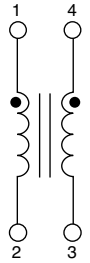

Surface Mount Common Mode Chokes

Suited for LAN and Telecom WAN Applications

Pulse a YAGEO company

High Frequncy Chokes	Electrical Specifications @ 25°C												
Part Number [1]	No. of Lines	Inductance (µH MIN)	Common Mode Attenuation (dB TYP)									DCR (Ω MAX)	Primary Appication
			100 KHz	1 MHz	10 MHz	30 MHz	50 MHz	100 MHz	300 MHz	500 MHz	1 GHz		
PE-65857NL	4	22.5	7	20	30	37	38	34	24	13	–	0.22	LAN
T8003NL*	4	33	9	13	32	32	30	27	16	17	13	0.20	WAN
PE-67540NL	4	100	14	33	44	48	49	44	34	29	20	0.60	WAN
23Z104SMNL	4	68	8	22	28	28	27	25	20	15	–	0.20	LAN
23Z106SMNL	6	68	8	22	29	30	30	29	24	19	–	0.20	LAN
23Z105SMNL	8	68	8	24	30	29	27	24	16	11	–	0.20	LAN
PE-69011NL*	8	36	8	24	36	39	35	29	18	11	–	0.35	WAN

1. For Tape & Reel packaging, add suffix "**T**" to the end of the part number e.g. T8003NL**T** the exception is 23Z106SMNL-**T**
* All Parts conform to JEDEC-J-STD for Moisture Sensitivity Level 1 wiht the exception of T8003NL and PE-69011NL which are MSL4

MECHANICALS

SCHEMATICS

PE-65857NL, PE-67540NL

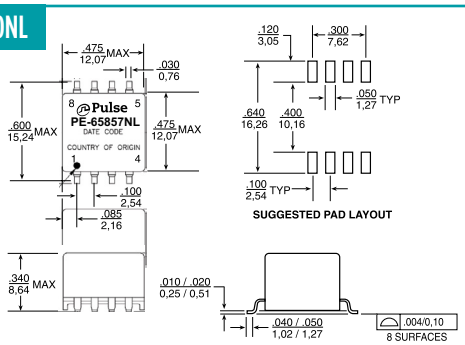

Dimensions: Inches / mm

Unless otherwise specified, all tolerances are ± .010 / 0,25

Weight ..... 1.28 grams
Tape & Reel 250/reel
Tube .....40 pcs

PE-65857NL

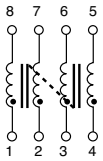

PE-67540NL

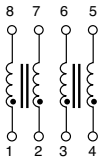

T8003NL

MSL 4

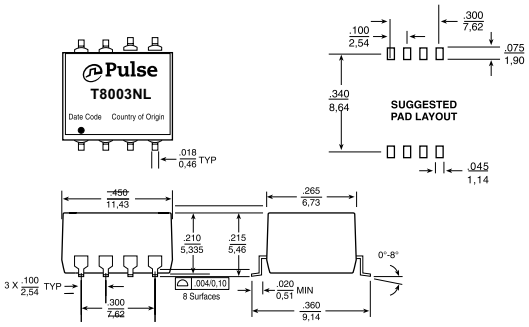

Dimensions: Inches / mm

Unless otherwise specified, all tolerances are ± .010 / 0,25

Weight ..... 0.89 grams
Tape & Reel 750/reel
Tube .....40 pcs

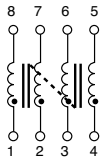

PE-69011NL

MSL 4

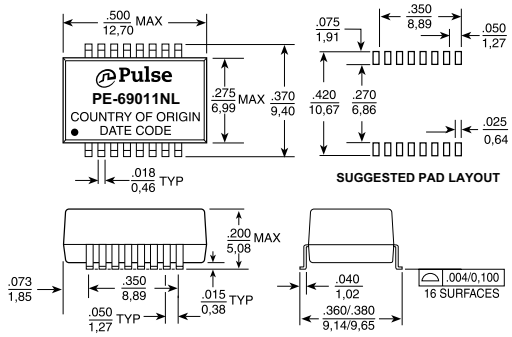

Dimensions: Inches / mm

Unless otherwise specified, all tolerances are ± .010 / 0,25

Weight ..... 0.89 grams
Tape & Reel 850/reel
Tube .....40 pcs

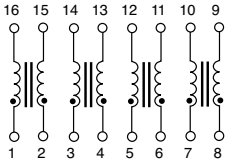

Surface Mount Common Mode Chokes

Suited for LAN and Telecom WAN Applications

MECHANICALS

SCHEMATICS

23Z104SMNL

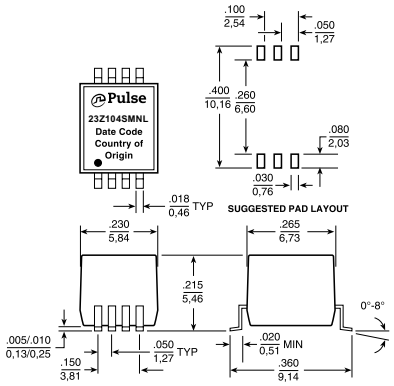

Dimensions: Inches / mm

Unless otherwise specified, all tolerances are ± .010 / 0,25

Weight ..... 0.30 grams
Tape & Reel 750/reel
Tube .....85 pcs

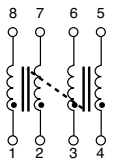

23Z105SMNL, 23Z106SMNL

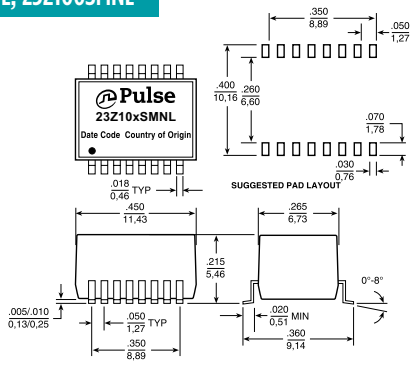

Dimensions: Inches / mm

Unless otherwise specified, all tolerances are ± .010 / 0,25

Weight ..... 0.60 grams
Tape & Reel 750/reel
Tube 40/tray

23Z105SMNL

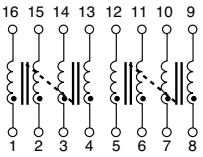

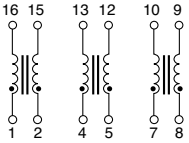

23Z106SMNL

COMMON MODE TEST CIRCUIT FOR SURFACE MOUNT AND THROUGH HOLE

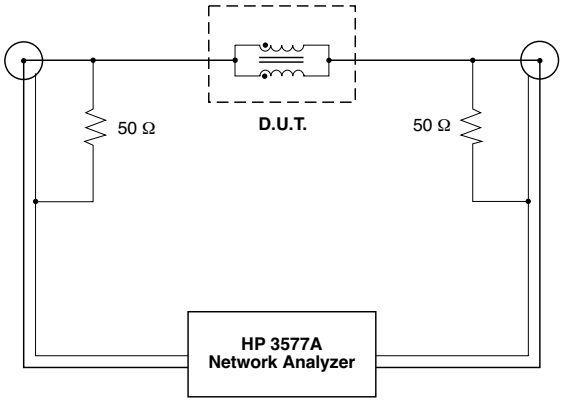

Test Notes:

1. Network analyzer calibrated to compensate for 50 Ω resistors.
2. All windings on a core are connected in parallel for the test.
3. For multi-core chokes, test data is for one core only. The windings on the other core(s) are left unconnected (i.e. open).

For More Information:

Americas - prodinfonetworkamericas@yageo.com | **Europe -** prodinfonetworkemea@yageo.com | **Asia -** prodinfonetworkapac@yageo.com

Performance warranty of products offered on this data sheet is limited to the parameters specified. Data is subject to change without notice. Other brand and product names mentioned herein may be trademarks or registered trademarks of their respective owners. © Copyright, 2023. Pulse Electronics, Inc. All rights reserved.