10/100Base-TX Quad Port Transformer Modules

For Use with Tranceivers Requiring 1:1 Transmit and Receive Turns Ratio

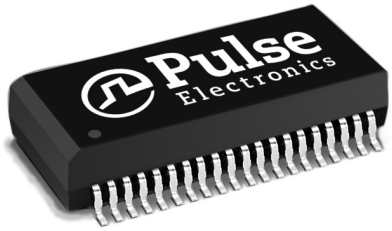

- *RoHS peak reflow temperature rating: 245°C*
- *Meets IEEE 802.3 specification*
- *Models designed to support four single or double-stacked RJ-45 connectors*

Electrical Specifications @ 25°C - Operating Temperature 0°C to 70°C

Part Number[1]	Insertion Loss (dB TYP)	Return Loss (dB TYP)				Crosstalk (dB TYP)				Common to Common Rejection Ratio 0.1-60 MHz (dB TYP)		Differential to Common Mode Rejection (dB TYP)	
	0.1-100 MHz	2-30 MHz	40 MHz	50 MHZ	60-80 MHZ	1 MHz	30 MHz	60 MHz	100 MHz	TX	RX	1-60 MHz	60-200 MHz
H1036LNL[2d]	-0.5	-21	-17	-14.5	-12	-65	-55	-45	-35	-30	-30	-40	-30
H1044NL[2d]	-0.5	-21	-17	-14.5	-12	-65	-55	-45	-35	-30	-30	-40	-30
H1053NL[2d]	-0.5	-21	-17	-14.5	-12	-65	-50	-40	-30	-30	-30	-40	-30
H1060NL[2d]	-0.5	-21	-17	-14.5	-12	-65	-50	-40	-30	-30	-30	-40	-30
H1062NL[2d]	-0.5	-21	-17	-14.5	-12	-65	-55	-45	-35	-30	-30	-40	-30

1. For Tape & Reel packaging, add the suffix "**T**" to the end of the part number when ordering. e.g. H1044NL**T**.
2. MSL = Moisture Sensitivity Level a =1, b = 2, c = 3, d = 4

Mechanicals

H10XXNL

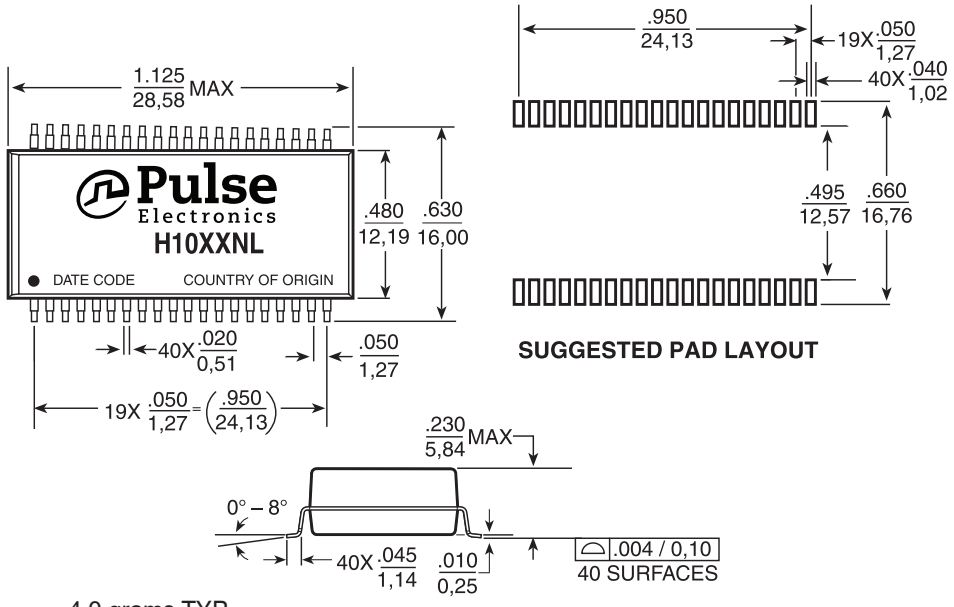

Weight .....4.0 grams TYP
Tube 15/tube
Tape & Reel 250/reel

Dimensions: Inches / mm Unless otherwise specified, all tolerances are ± .10 / 0,25

10/100Base-TX Quad Port Transformer Modules

For Use with Tranceivers Requiring 1:1 Transmit and Receive Turns Ratio

Quad-Port Solutions: These quad modules are designed to support four single or double stacked RJ-45 connectors. Each has a different pinout for optimization in layout with various IC manufacturers.

Schematics

H1036LNL

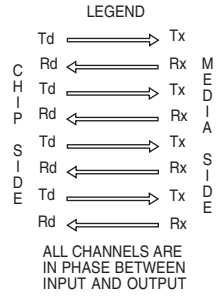

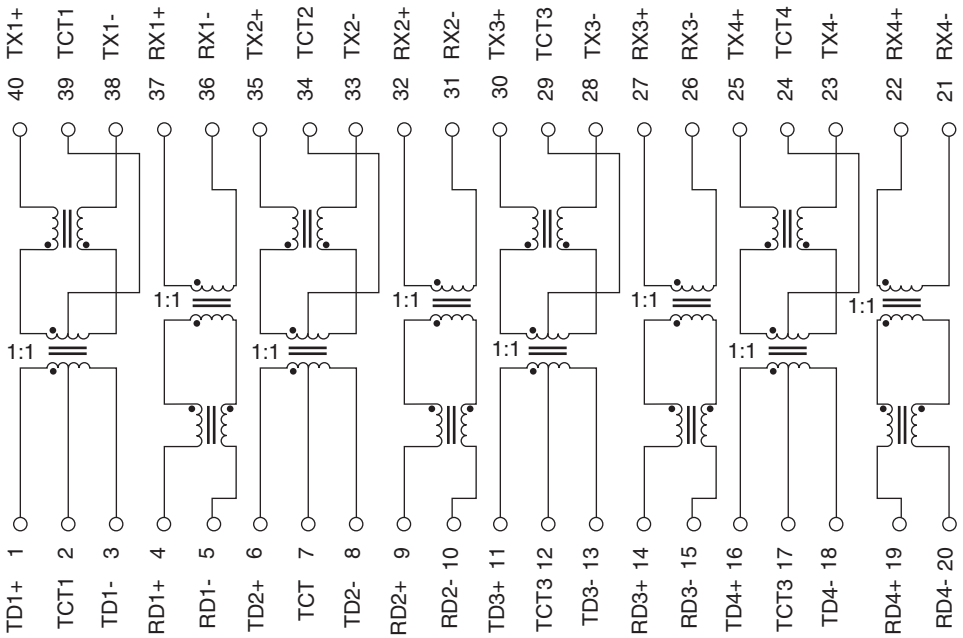

H1044NL

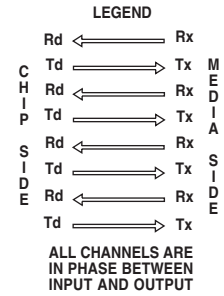

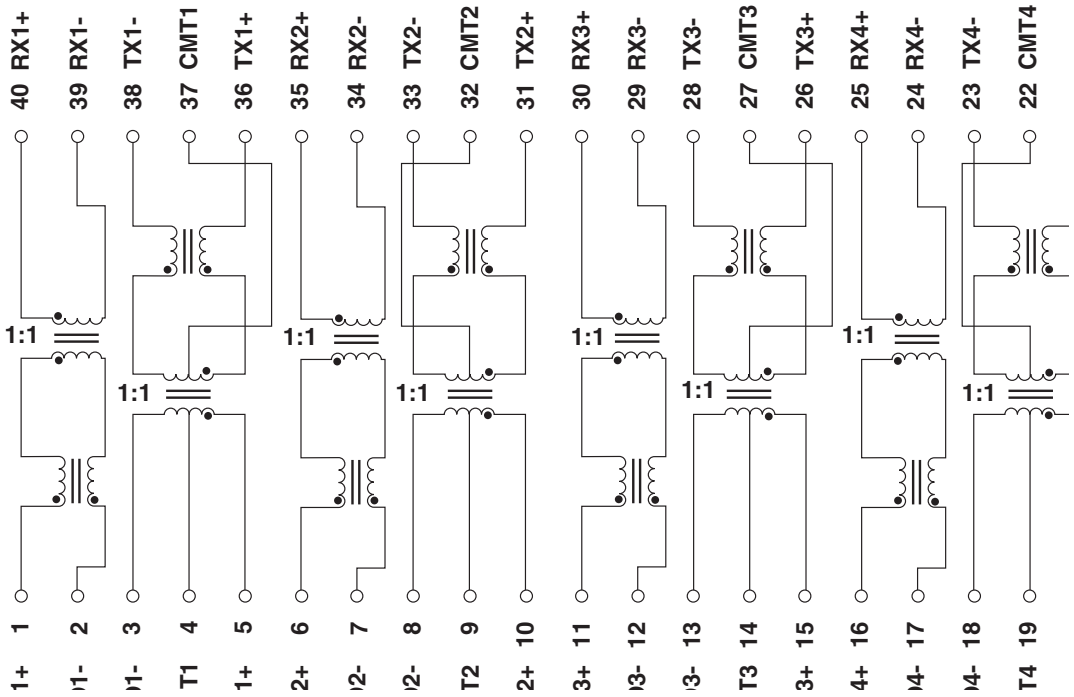

10/100Base-TX Quad Port Transformer Modules

For Use with Tranceivers Requiring 1:1 Transmit and Receive Turns Ratio

Schematics *(continued)*

H1053NL

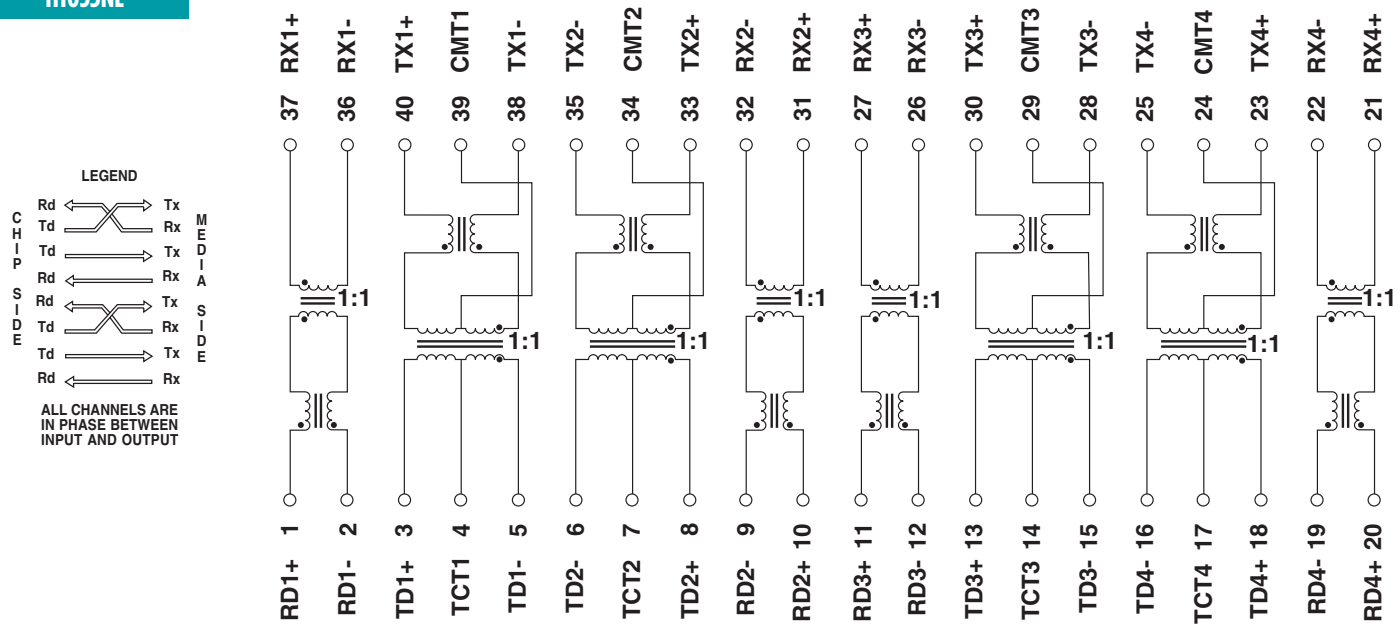

H1060NL

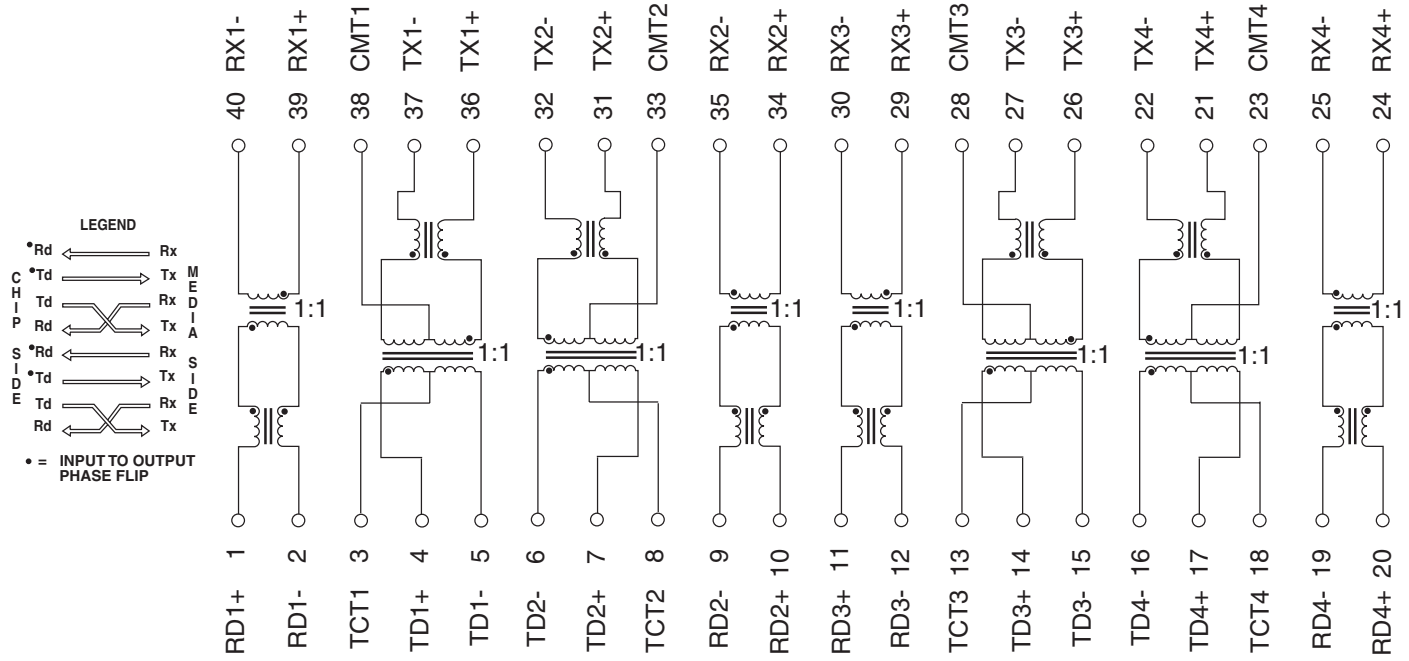

10/100Base-TX Quad Port Transformer Modules

For Use with Tranceivers Requiring 1:1 Transmit and Receive Turns Ratio

Schematics *(continued)*

H1062NL

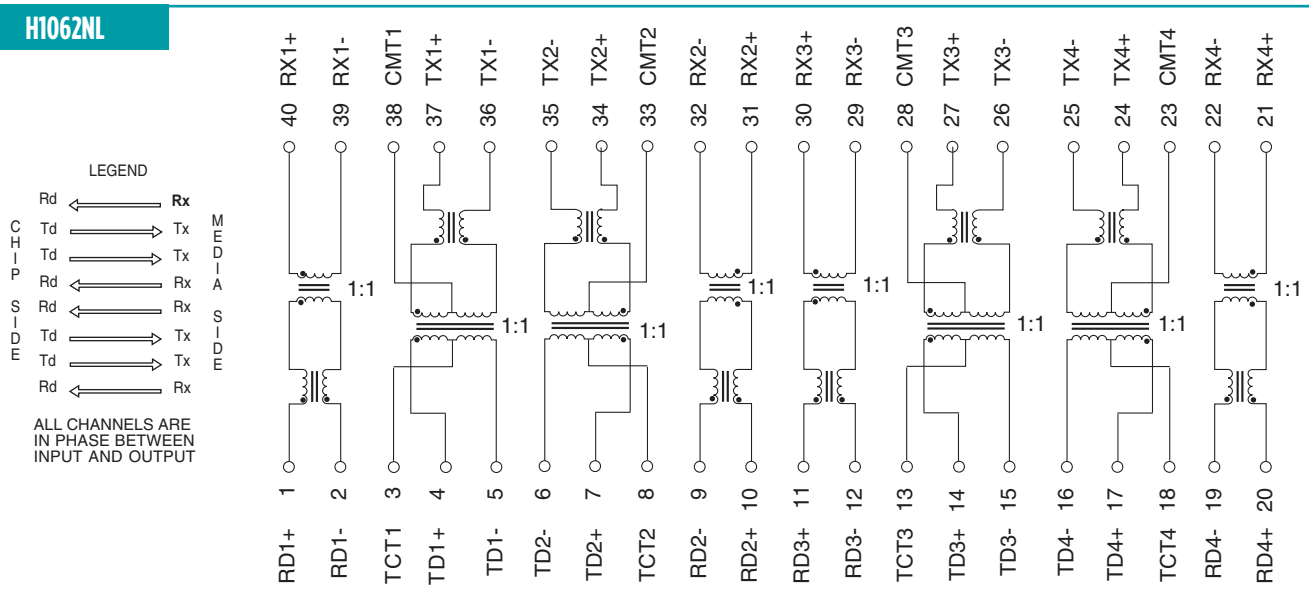

Tape & Reel Specifications

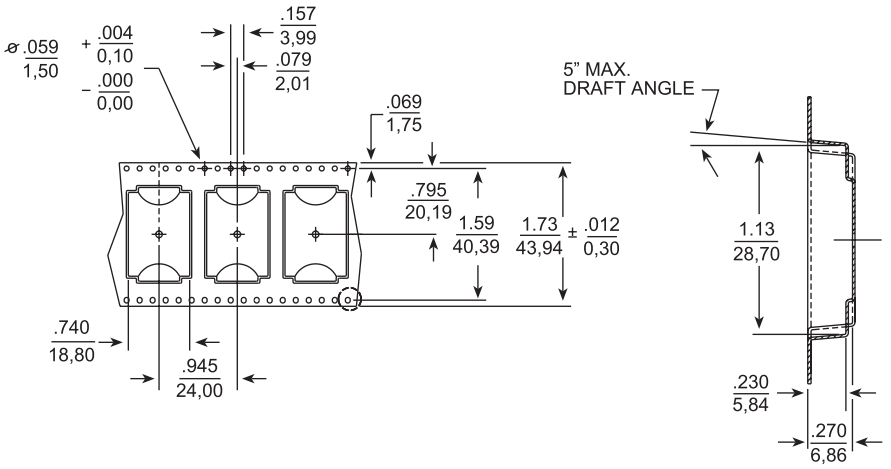

For More Information

Pulse Worldwide Headquarters
12220 World Trade Drive
San Diego, CA
92128
U.S.A.

Tel: 858 674 8100

Pulse Europe
Einsteinstrasse 1
D-71083 Herrenberg
Germany

Tel: 49 7032 7806

Pulse China Headquarters
B402, Shenzhen Academy of Aerospace Technology Bldg.
10th Kejinan Road
High-Tech Zone
Nanshan District
Shenzen, PR China
518057

Pulse North China
Room 2704/2705
Super Ocean Finance Ctr.
2067 Yan An Road West
Shanghai 200336
China

Pulse South Asia
135 Joo Seng Road
#03-02
PM Industrial Bldg.
Singapore 368363

Tel: 65 6287 8998
Fax: 65 6287 8998

Pulse North Asia
3F, No. 198
Zhongyuan Road
Zhongli City
Taoyuan County 320
Taiwan R. O. C.
Tel: 886 3 4356768
Fax: 886 3 4356823
(Pulse)

Performance warranty of products offered on this data sheet is limited to the parameters specified. Data is subject to change without notice. Other brand and product names mentioned herein may be trademarks or registered trademarks of their respective owners. © Copyright, 2011. Pulse Electronics, Inc. All rights reserved.