Star Magnetics™
10/100BASE-T Transformer Modules with PoE* Option and 1:1 Turns Ratios

**Power over Ethernet*

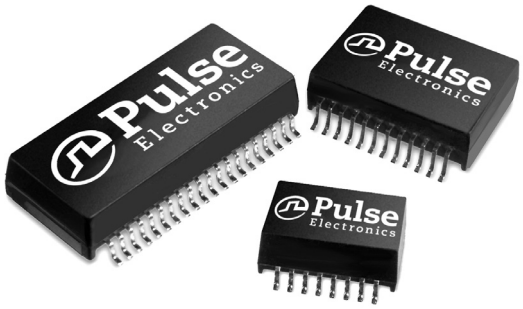

- *RoHS peak reflow temperature rating 245°C*
- *Meets IEEE 802.3 specification*
- *Compact footprint*

Electrical Specifications @ 25°C – Operating Temperature 0°C to 70°C												
Part Number	**PoE**	**Number of Ports**	**Insertion Loss** (dB MAX)			**Return Loss** (Z out = 100 Ω ± 15%)			**Crosstalk** (adjacent channels dB MIN)			**Hipot** (Vrms MIN)
			0.1 MHz	**1 MHz**	**100 MHz**	**30 MHz**	**60 MHz**	**80 MHz**	**30 MHz**	**60 MHz**	**100 MHz**	
H0055NL[1, 6a, 7]	No	1	-2.5	—	-1.0	-16	-10	-10	-45	-40	-33	1500
H0056NL[2, 6a, 7]	No	1	—	-0.8	-0.9	-16	-10	-10	-45	-40	-33	1500
H1259NL[6a, 7]	No	4	-1.2	—	-1.4	-16	-10	-10	-45	-40	-33	1500
HX1259NL[3, 6a, 7]	No	4	-1.2	—	-1.4	-16	-10	-10	-45	-40	-33	1500
H1260NL[6a, 7]	No	1	-1.1	—	-1.1	-16	-10	-10	-35	-30	-30	1500
HX1260NL[3, 6a, 7]	No	1	-1.1	—	-1.1	-16	-10	-10	-35	-30	-30	1500
H1278NL[6a, 7]	No	1	-1.1	—	-1.0	-16	-10	-10	-45	-40	-33	1500
H1305NL[6a, 7]	No	2	-1.2	—	-1.4	-16	-10	-10	-45	-40	-33	1500
HX1305NL[3, 6a, 7]	No	2	-1.2	—	-1.4	-16	-10	-10	-45	-40	-33	1500
H2260NL[6a, 7]	Yes[4]	1	-1.1	—	-1.1	-16	-10	-10	-35	-30	-30	1500
HX2260NL[3, 6a, 7]	Yes[4]	1	-1.1	—	-1.1	-16	-10	-10	-35	-30	-30	1500
H2305NL[6a, 7]	Yes[4]	2	-1.2	—	-1.4	-16	-10	-10	-45	-40	-33	1500
HX2305NL[3, 6a, 7]	Yes[4]	2	-1.2	—	-1.4	-16	-10	-10	-45	-40	-33	1500

Notes:

1. H0055NL is designed to meet 200 µH nom.

2. H0056NL is designed to meet 300 µH nom.

3. Parts offer extended operating temperature of -40 to +85°C

4. These parts are compliant to IEEE802.3af, Power over Ethernet (PoE) standard.

5. When ordering Tape & Reel packaging, add a "T" suffix to the end of the part number, e.g. H0056NL**T**

6. MSL = Moisture Sensivity Level: **a**=1, **b**=2, **c**=3, **d**=4, **e**=5

7. Not for sale in U.S.

Star Magnetics™
10/100BASE-T Transformer Modules with PoE* Option and 1:1 Turns Ratios

**Power over Ethernet*

Mechanicals

H0055NL

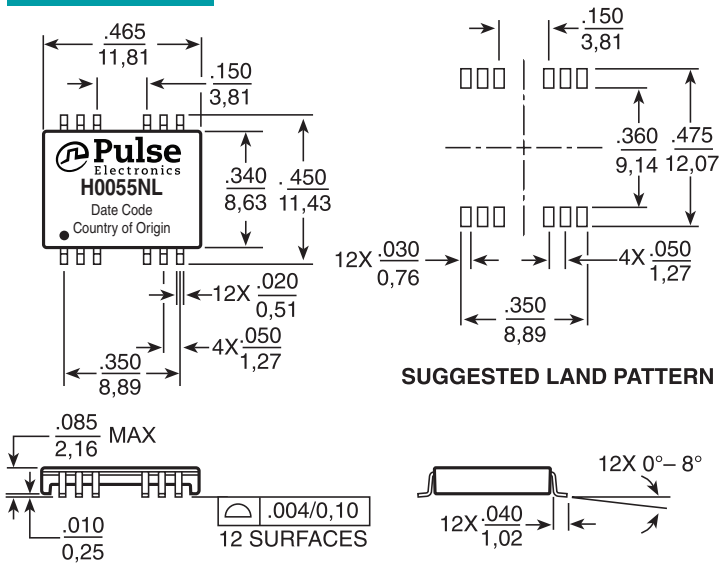

Weight .....0.35 grams
Tape & Reel 1000/reel
Tube 40/tube

H0056NL

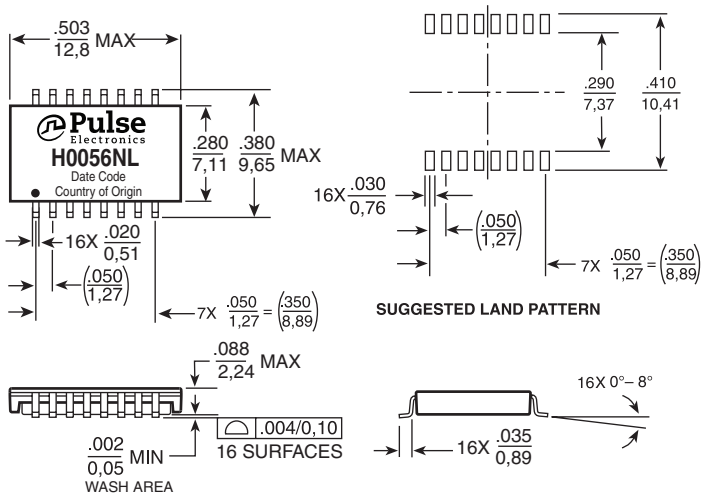

Weight .....0.30 grams
Tape & Reel 2000/reel
Tube 40/tube

Dimensions: Inches / mm — Unless otherwise specified, all tolerances are ± .010 / 0,25

H1259NL, HX1259NL

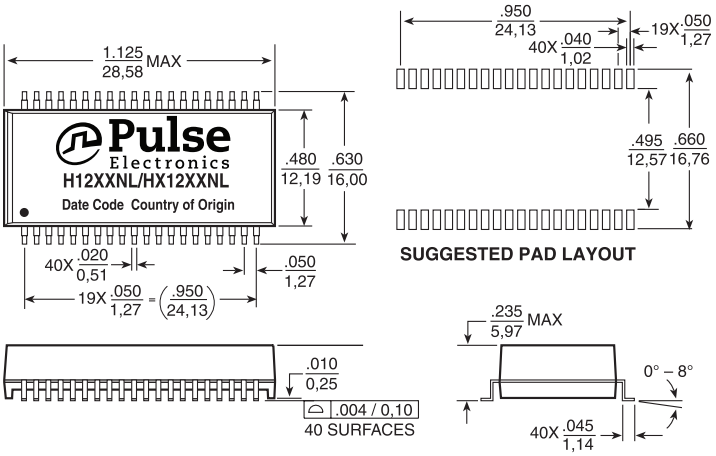

Weight .....3.4 grams
Tape & Reel 250/reel
Tube 15/tube

H1260NL, HX1260NL, H2260NL, HX2260NL

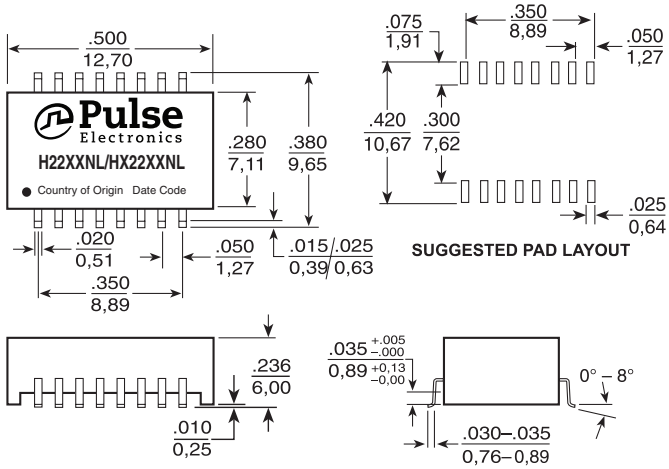

Weight .....0.9 grams
Tape & Reel 600/reel
Tube 40/tube

Dimensions: Inches / mm — Unless otherwise specified, all tolerances are ± .010 / 0,25

Mechanicals *(continued)*

H1278NL

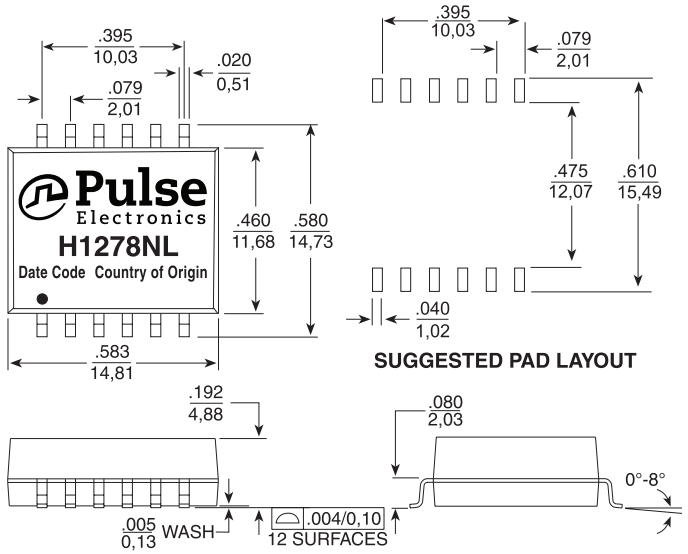

Weight .....0.9 grams
Tape & Reel 350/reel
Tube 35/tube

Dimensions: Inches / mm Unless otherwise specified, all tolerances are ± .010 / 0,25

H1305NL, HX1305NL, H2305NL, HX2305NL

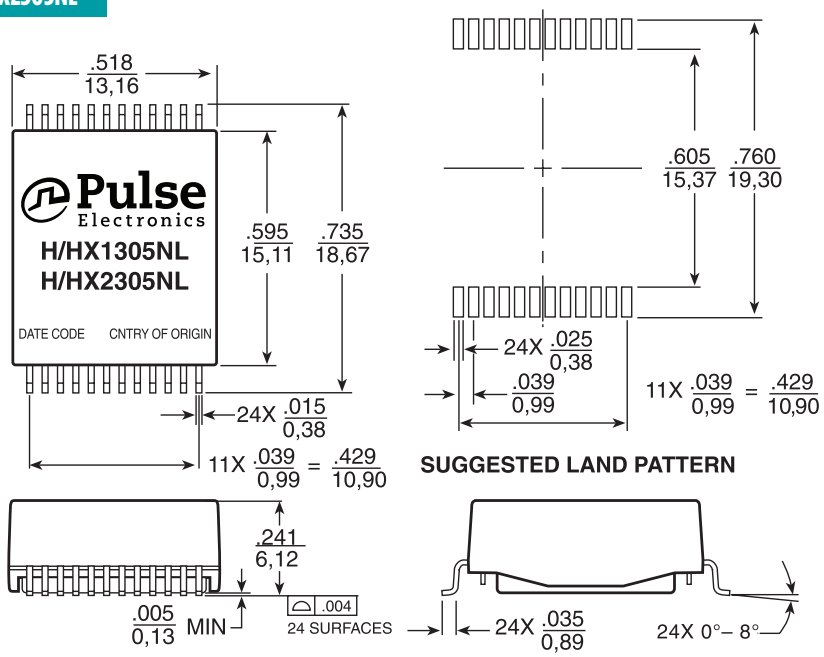

Weight .....2.7 grams
Tape & Reel 350/reel
Tube 35/tube

Dimensions: Inches / mm Unless otherwise specified, all tolerances are ± .010 / 0,25

Star Magnetics™
10/100BASE-T Transformer Modules with PoE* Option and 1:1 Turns Ratios

**Power over Ethernet*

Schematics

H0055NL

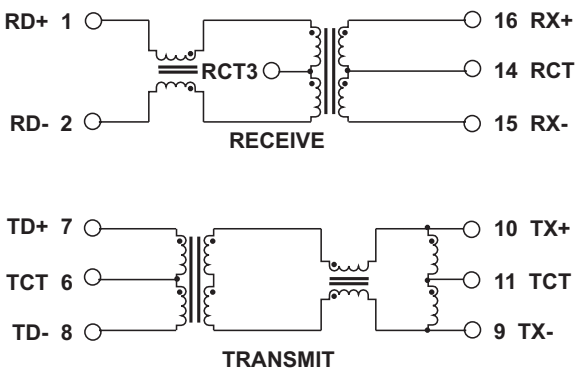

H0056NL

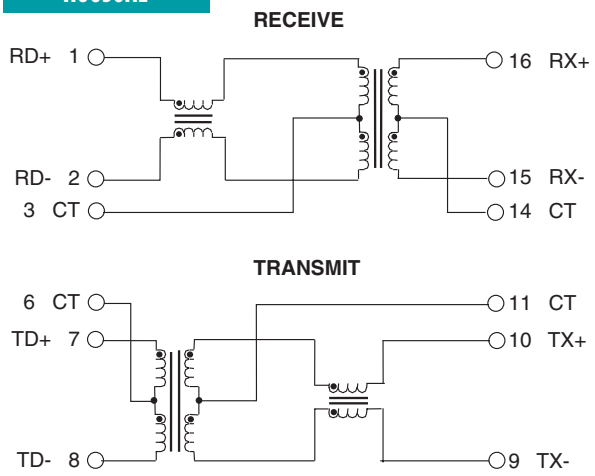

H1260NL, HX1260NL

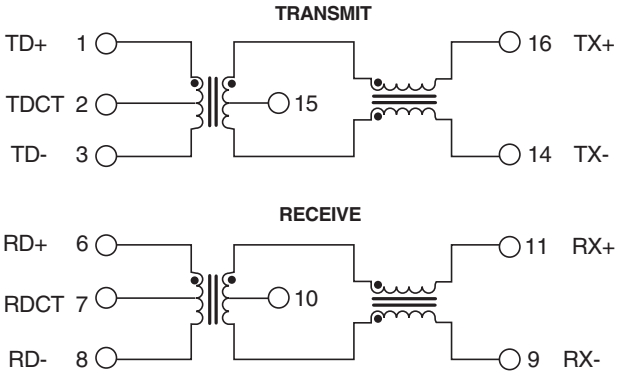

H1278NL

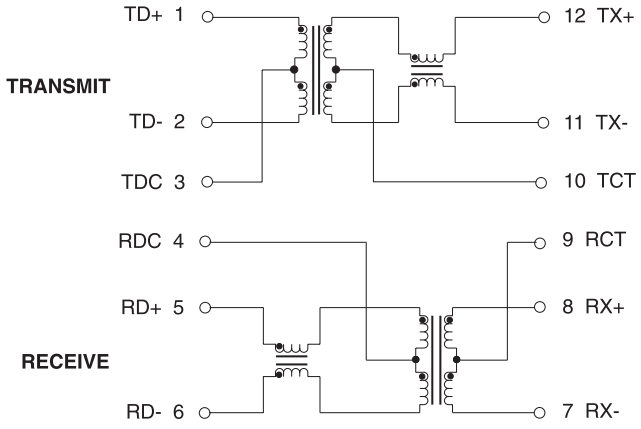

H2260NL, HX2260NL

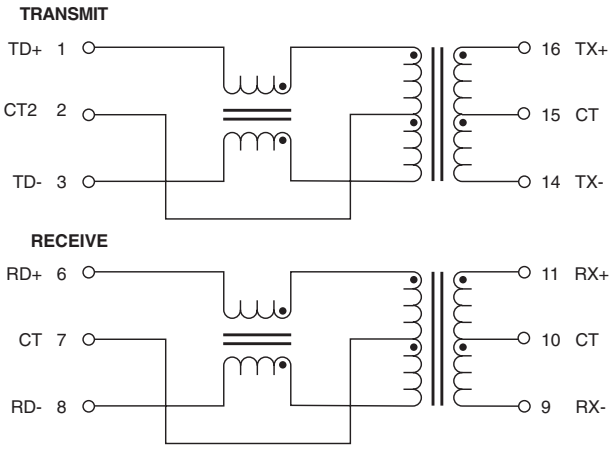

Star Magnetics™
10/100BASE-T Transformer Modules with PoE* Option and 1:1 Turns Ratios

**Power over Ethernet*

Schematics *(continued)*

H1305NL, HX1305NL

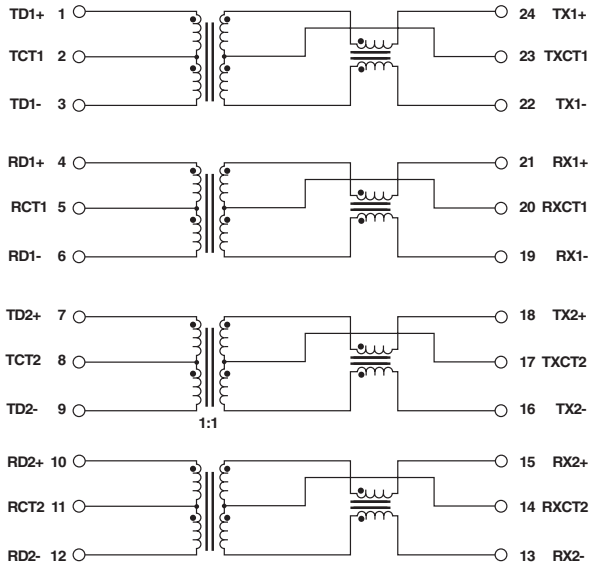

H1278NL

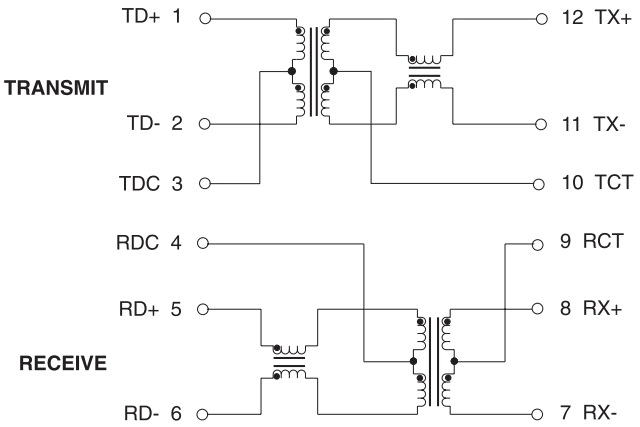

H2305NL, HX2305NL

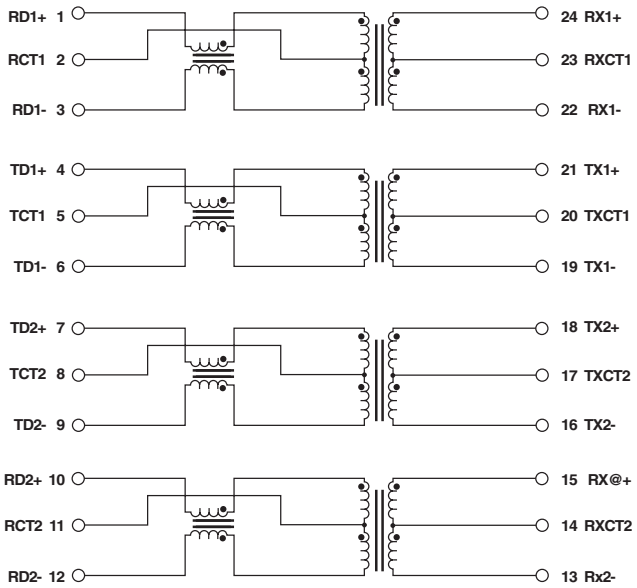

Star Magnetics™
10/100BASE-T Transformer Modules with PoE* Option and 1:1 Turns Ratios

**Power over Ethernet*

Schematics *(continued)*

H1259NL, HX1259NL

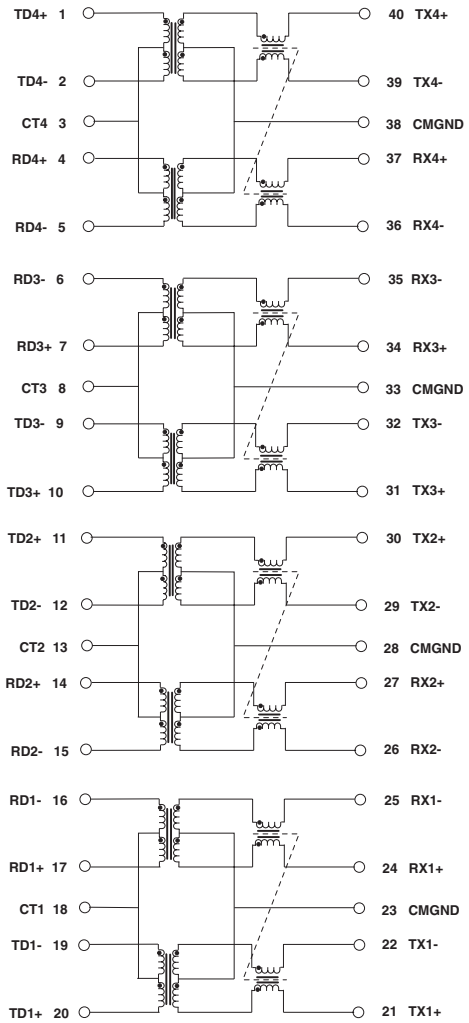

For More Information

Pulse Worldwide Headquarters
12220 World Trade Drive
San Diego, CA
92128
U.S.A.

Tel: 858 674 8100

Pulse Europe
Einsteinstrasse 1
D-71083 Herrenberg
Germany

Tel: 49 7032 7806

Pulse China Headquarters
B402, Shenzhen Academy of Aerospace Technology Bldg.
10th Kejinan Road
High-Tech Zone
Nanshan District
Shenzen, PR China
518057

Pulse North China
Room 2704/2705
Super Ocean Finance Ctr.
2067 Yan An Road West
Shanghai 200336
China

Pulse South Asia
135 Joo Seng Road
#03-02
PM Industrial Bldg.
Singapore 368363

Tel: 65 6287 8998
Fax: 65 6287 8998

Pulse North Asia
3F, No. 198
Zhongyuan Road
Zhongli City
Taoyuan County 320
Taiwan R. O. C.
Tel: 886 3 4356768
Fax: 886 3 4356823
(Pulse)

Performance warranty of products offered on this data sheet is limited to the parameters specified. Data is subject to change without notice. Other brand and product names mentioned herein may be trademarks or registered trademarks of their respective owners. © Copyright, 2013. Pulse Electronics, Inc. All rights reserved.