# Halogen Free BMS Transformer

*Approved for ADBM6830 16-channel multicell battery monitor IC*

Pulse
a YAGEO company

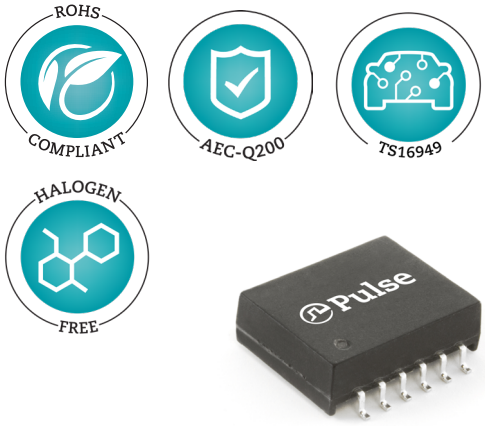


- *Fully qualified with leading BMS Silicon from ADI*
- *UL Compliance to IEC/UL62368-1*
- *Low profile height 4.88mm max*
- *High temperature performance up to +125°C*
- *Automated Winding and Production Process*

## *Applications:*

*Ideal for Electric Vehicles (EV), Energy Storage (ESS) and marine or aviation transportation.*

| Electrical Specifications @ 25°C - Operating Temperature -40°C to +85°C | | | | | | | | |
|---|---|---|---|---|---|---|---|---|
| **Part Number** | **Inductance** (100kHz, 100mVrms) | **Turns Ratio** | **Choke fitted** | **Isolation breakdown** (Pri:Sec) | **Working Voltage** | **Insulation & Creepage** (mm) | **Operating Temperature** | **Qualified BMS Silicon** |
| **HM2171HL** | 150 uH min<br>450 uH max | 1.00 +/- 2% | YES | 4300Vrms / 60sec | 1500VDC | Functional >3mm | -40 to +125°C | ADI - ADBM6830 |

## Additional Electrical performance

| RJ45 Material Specification | | | | | | | |
|---|---|---|---|---|---|---|---|
| **Part Number** | **Leakage Inductance** (Max) | **Winding DCR (Ω)** | | **Insertion Loss** | **Return Loss** | **CMRR** | |
| | | PHY Side | Line Side | | \|Z\|out = 100 Ω | 1 - 10MHz | 10- 1000MHz |
| **HM2113ZNL** | 0.50 uH @ 100kHz | 0.45 max | 0.85 max | -0.30dB max @ 4MHz | -20 dB min @ 4MHz | -35dB | -20dB |

**Notes:**

1. Storage Temperature: -50°C to +125°C
2. Compliance to J-STD:
   A. J-STD-002: Solderability at 245°C Reflow Profile
   B. J-STD-020: Moisture Sensitive Level 1
   C. J-STD-075: R7, 245°C Maximum Through Reflow Solder
3. The NL suffix part comes in Tubes with 35pcs per tube. To order tape and reel packaging add a 'T' suffix to the part number (ie: HM2171HL becomes H2171HLT). Quantity per reel is 350pcs/reel.
4. Header: DAP (Diallyl Phthalate) with flammability Rating UL 94V-0 or better
5. Lead Frame: Cooper Alloy
   Under plated: Half Hard Ductile Nickel 50-100" (1.3-2.5um)
   Over plated : 100% Tin electro-deposited per ASTM B545 300 - 50u"(8-13um)
   Finish : Matte finish 100% Tin solder
6. AEC-Q200 Qualified, PPAP on request

## MECHANICAL

### HM2171HL

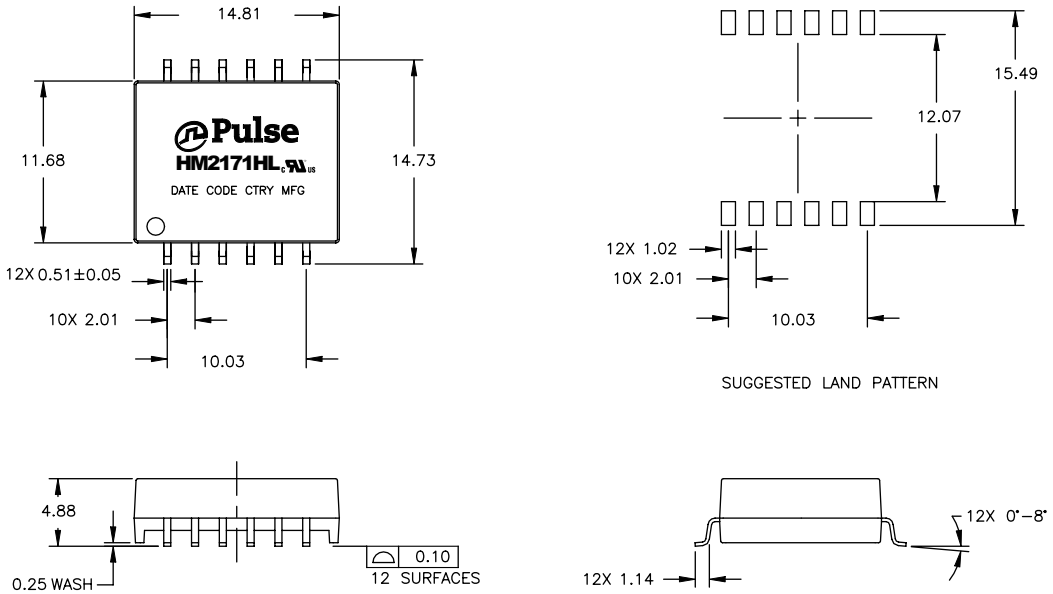


**Dimensions:**
Unless otherwise specified,
all tolerances are ± 0,25

## SCHEMATIC

### HM2171HL

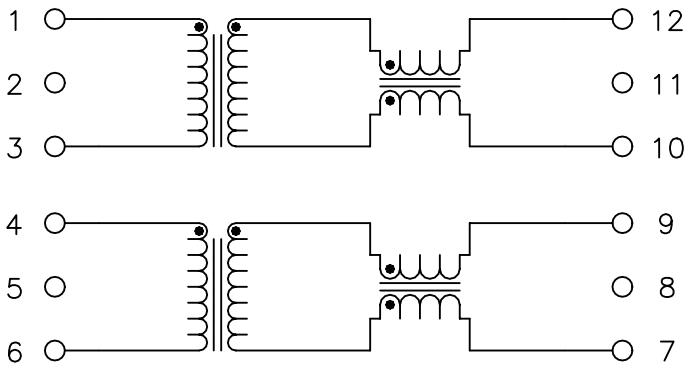

# Halogen Free BMS Transformer

*Approved for ADBM6830 16-channel multicell battery monitor IC*

## TAPE & REEL

**HM2171HL**

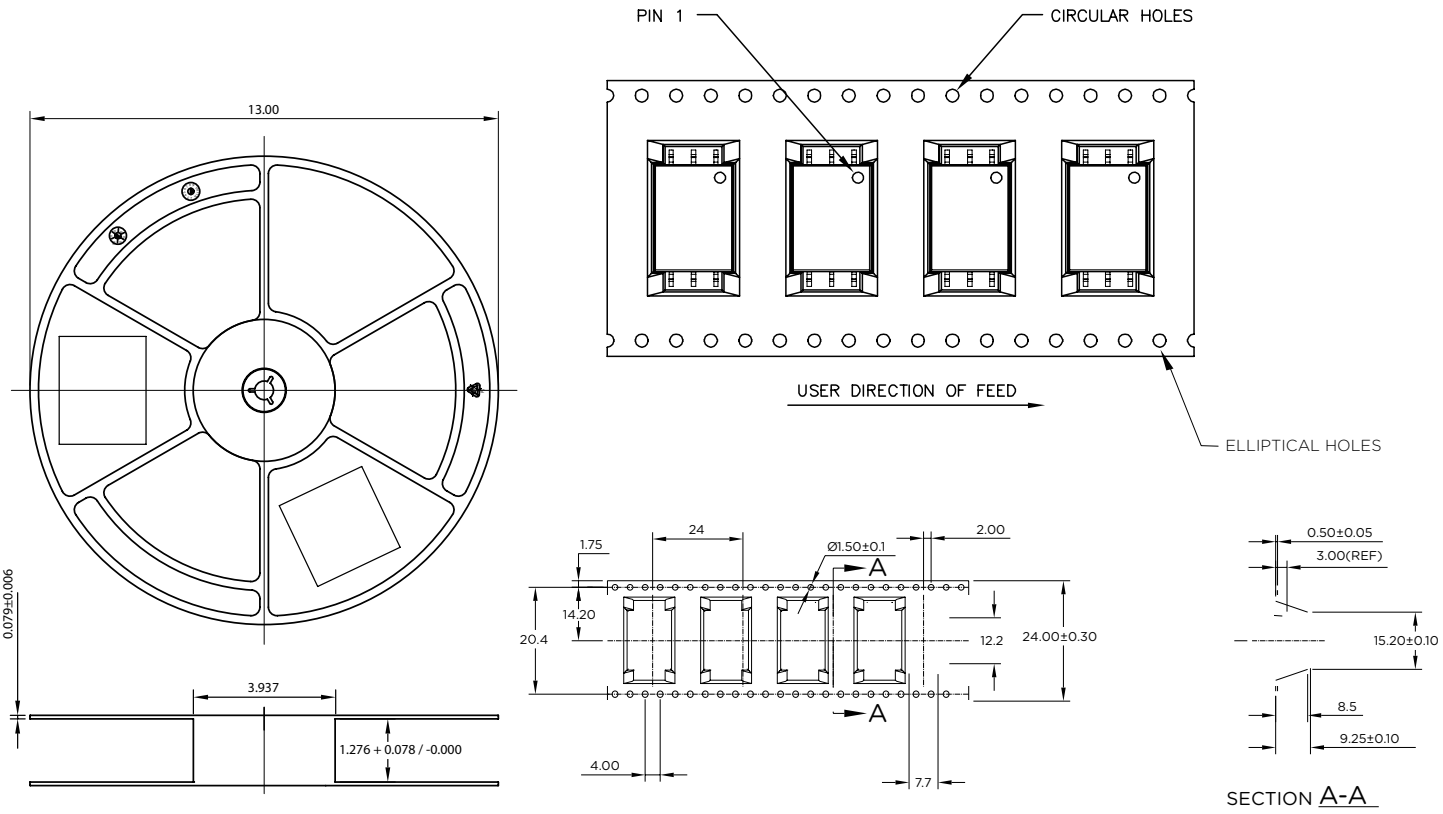



**For More Information:**

**Americas -** prodinfonetworkamericas@yageo.com | **Europe -** comms-apps-europe@yageo.com | **Asia -** prodinfonetworkapac@yageo.com



Performance warranty of products offered on this data sheet is limited to the parameters specified. Data is subject to change without notice. Other brand and product names mentioned herein may be trademarks or registered trademarks of their respective owners. © Copyright, 2022. Pulse Electronics, Inc. All rights reserved.