POWER TRANSFORMERS

Low Frequency Laminated — High-Power Low-Profile Humbucking



AGENCY APPROVALS

- UL, 506, File E73539 Class B

- UI design increases power/height ratio
- Side-by-side design lowers interwinding capacitance
- Semi-toroidal construction reduces magnetic fields and EMI
- Greater surface area provides more uniform heat dissipation
- Solder-lug terminals for rugged field applications
- 1500V HIPOT
- Baked resin provides an environmentally-resistant finish

Mechanical

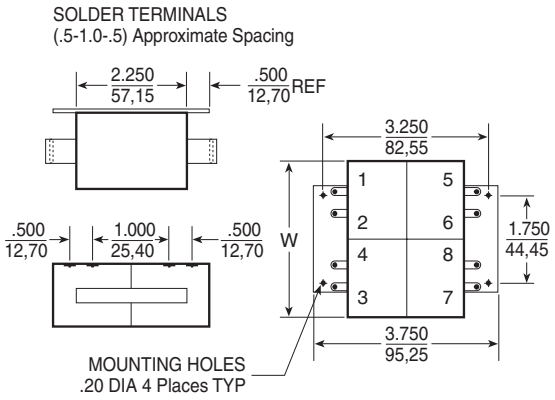

Schematic

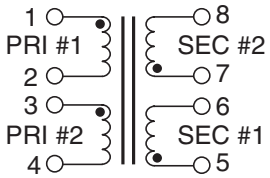

Non-Standard Ratings - Tapped primaries, secondaries of different voltages, currents or frequencies can be furnished.
Mounting Configuration - Through-holes provided in core assembly.

Dimensions (inches)

Size	H (MAX)	W (MAX)	Wt. (lb.)	VA (NOM)	Reg. (% TYP)	Trise (°C TYP)
1	0.85	3	1	20	30	25
2	1.25	3	1.75	50	30	45
3	1.5	3	2.25	75	25	55
4	1.85	3	3	135	20	65
5	2.35	3	4.25	200	15	90

Part No.	Size	Secondary RMS Rating	
		Series	Parallel
LP10-2B34	1	10V C.T. @ 2.00A	5V @ 4.00A
LP10-5B35	2	10V C.T. @ 5.00A	5V @ 10.0A
LP10-7.5B36	3	10V C.T. @ 7.50A	5V @ 15.0A
LP10-13.5B37	4	10V C.T. @ 13.5A	5V @ 27.0A
LP10-20B38	5	10V C.T. @ 20.0A	5V @ 40.0A
LP12-1.6B39	1	12.6V C.T. @ 1.60A	6.3V @ 3.20A
LP12-4B40	2	12.6V C.T. @ 4.00A	6.3V @ 8.00A
LP12-6B41	3	12.6V C.T. @ 6.00A	6.3V @ 12.0A
LP12-11B42	4	12.6V C.T. @ 11.0A	6.3V @ 22.0A
LP12-16B43	5	12.6V C.T. @ 16.0A	6.3V @ 32.0A
LP16-1.25B44	1	16V C.T. @ 1.25A	8V @ 2.50A
LP16-3.15B45	2	16V C.T. @ 3.15A	8V @ 6.30A
LP16-4.75B46	3	16V C.T. @ 4.75A	8V @ 9.50A
LP16-8.5B47	4	16V C.T. @ 8.50A	8V @ 17.0A
LP16-12.5B48	5	16V C.T. @ 12.5A	8V @ 25.0A
LP18-1.1B110	1	18V C.T. @ 1.10A	9V @ 2.20A
LP18-2.75B111	2	18V C.T. @ 2.75A	9V @ 5.50A
LP18-4.2B112	3	18V C.T. @ 4.20A	9V @ 8.40A
LP18-7.5B113	4	18V C.T. @ 7.50A	9V @ 15.0A
LP18-11B114	5	18V C.T. @ 11.0A	9V @ 22.0A
LP20-1B49	1	20V C.T. @ 1.00A	10V @ 2.00A
LP20-2.5B50	2	20V C.T. @ 2.50A	10V @ 5.00A
LP20-3.75B51	3	20V C.T. @ 3.75A	10V @ 7.50A
LP20-6.75B52	4	20V C.T. @ 6.75A	10V @ 13.5A
LP20-10B53	5	20V C.T. @ 10.0A	10V @ 20.0A
LP24-0.85B54	1	24V C.T. @ 0.85A	12V @ 1.70A
LP24-2.1B55	2	24V C.T. @ 2.10A	12V @ 4.20A
LP24-3.15B56	3	24V C.T. @ 3.15A	12V @ 6.30A
LP24-5.75B57	4	24V C.T. @ 5.75A	12V @ 11.5A
LP24-8.5B58	5	24V C.T. @ 8.50A	12V @ 17.0A
LP28-0.7B120	1	28V C.T. @ 0.70A	14V @ 1.40A
LP28-1.75B121	2	28V C.T. @ 1.75A	14V @ 3.50A
LP28-2.7B122	3	28V C.T. @ 2.70A	14V @ 5.40A
LP28-4.8B123	4	28V C.T. @ 4.80A	14V @ 9.60A
LP28-7B124	5	28V C.T. @ 7.00A	14V @ 14.0A
LP30-0.65B130	1	30V C.T. @ 0.65A	15V @ 1.30A
LP30-1.65B131	2	30V C.T. @ 1.65A	15V @ 3.30A
LP30-2.5B132	3	30V C.T. @ 2.50A	15V @ 5.00A
LP30-4.5B133	4	30V C.T. @ 4.50A	15V @ 9.00A
LP30-6.65B134	5	30V C.T. @ 6.65A	15V @ 13.3A
LP34-0.6B59	1	34V C.T. @ 0.60A	17V @ 1.20A
LP34-1.5B60	2	34V C.T. @ 1.50A	17V @ 3.00A
LP34-2.25B61	3	34V C.T. @ 2.25A	17V @ 4.50A
LP34-4B62	4	34V C.T. @ 4.00A	17V @ 8.00A
LP34-6B63	5	34V C.T. @ 6.00A	17V @ 12.0A
LP40-0.5B64	1	40V C.T. @ 0.50A	20V @ 1.00A
LP40-1.25B65	2	40V C.T. @ 1.25A	20V @ 2.50A
LP40-1.9B56	3	40V C.T. @ 1.90A	20V @ 3.80A
LP40-3.4B67	4	40V C.T. @ 3.40A	20V @ 6.80A
LP40-5B68	5	40V C.T. @ 5.00A	20V @ 10.0A
LP56-0.35B69	1	56V C.T. @ 0.35A	28V @ 0.70A
LP56-0.9B70	2	56V C.T. @ 0.90A	28V @ 1.80A
LP56-1.35B71	3	56V C.T. @ 1.35A	28V @ 2.70A
LP56-2.4B72	4	56V C.T. @ 2.40A	28V @ 4.80A
LP56-3.5B73	5	56V C.T. @ 3.50A	28V @ 7.00A
LP120-0.17B79	1	120V C.T. @ 170mA	60V @ 340mA
LP120-0.425B80	2	120V C.T. @ 425mA	60V @ 850mA
LP120-0.625B81	3	120V C.T. @ 625mA	60V @ 1.25A
LP120-1.1B82	4	120V C.T. @ 1.10A	60V @ 2.20A
LP120-1.7B83	5	120V C.T. @ 1.70A	60V @ 3.40A
LP230-0.09B84	1	230V C.T. @ 90mA	115V @ 180mA
LP230-0.22B85	2	230V C.T. @ 220mA	115V @ 440mA
LP230-0.325B86	3	230V C.T. @ 325mA	115V @ 650mA
LP230-0.6B87	4	230V C.T. @ 600mA	115V @ 1.20A
LP230-0.9B88	5	230V C.T. @ 900mA	115V @ 1.80A