High Frequency Planar Transforms

PA08XXNL Series (up to 140W)

Pulse
a YAGEO company



- ***Power Rating:*** *up to 140W*
- ***Height:*** *8.6mm to 9.7mm Max*
- ***Footprint:*** *23.4mm x 21.6mm Max*
- ***Frequency Range:*** *200kHz to 700kHz*
- ***Isolation (Primary to Secondary & Core):*** *1750V$_{DC}$*

Electrical Specifications @ 25°C – Operating Temperature -40°C to +125°C										
Part [3] Number	Turns Ratio			Schematic	Primary [1] Inductance (µH MIN)	Leakage [2] Inductance (µH MAX)	DCR (mΩ MAX)			Maximum Height (mm)
	Primary A	Primary B	Secondary				Primary A	Primary B	Secondary	
PA0801NL	4T	4T	4T (1T:1T:1T:1T)	A1	153	0.45	17.5	17.5	7	8.6
PA0802NL	4T	5T			194	0.45	17.5	20	7	8.6
PA0803NL	5T	5T			240	0.55	20	20	7	8.6
PA0804NL *	5T	6T			290	0.60	20	25	7	8.6
PA0805NL	6T	6T			345	0.65	25	25	7	8.6
PA0806NL	4T	4T	1T & 1T	A2	153	0.45	17.5	17.5	.875 & .875	8.6
PA0807NL	4T	5T			194	0.45	17.5	20	.875 & .875	8.6
PA0808NL	5T	5T			240	0.55	20	20	.875 & .875	8.6
PA0809NL *	5T	6T			290	0.60	20	25	.875 & .875	8.6
PA0810NL *	6T	6T			345	0.65	25	25	.875 & .875	8.6
PA0811NL	4T	4T	2T & 1T	A3	153	0.45	17.5	17.5	1.75 & 1.75	8.6
PA0812NL	4T	5T			194	0.45	17.5	20	1.75 & 1.75	8.6
PA0813NL	5T	5T			240	0.45	20	20	1.75 & 1.75	8.6
PA0814NL *	5T	6T			290	0.50	20	25	1.75 & 1.75	9.7
PA0815NL	6T	6T			345	0.55	25	25	1.75 & 1.75	9.7

Notes:

1. Inductance is measure, where applicable, with both primary windings connected in series (2 to 5, with 3 and 4 shorted).
2. Leakage inductance is measured on winding (2-5) with (3,4) and (7, 8, 9, 10, 11) shorted.
3. 3. The **NL** suffix indicates an RoHS-compliant part number. Non-NL suffixed parts are not necessarily RoHS compliant, but are electrically and mechanically equivalnt to NL versions. If a part number does not have the "**NL**" suffix, but an RoHS compliant version is required, please contact Pulse for availability.
4. Basic insulated parts can be made available. Please contact Pulse for availability.

* Contact Pulse for availability

Mechanical

PA0XXXNL

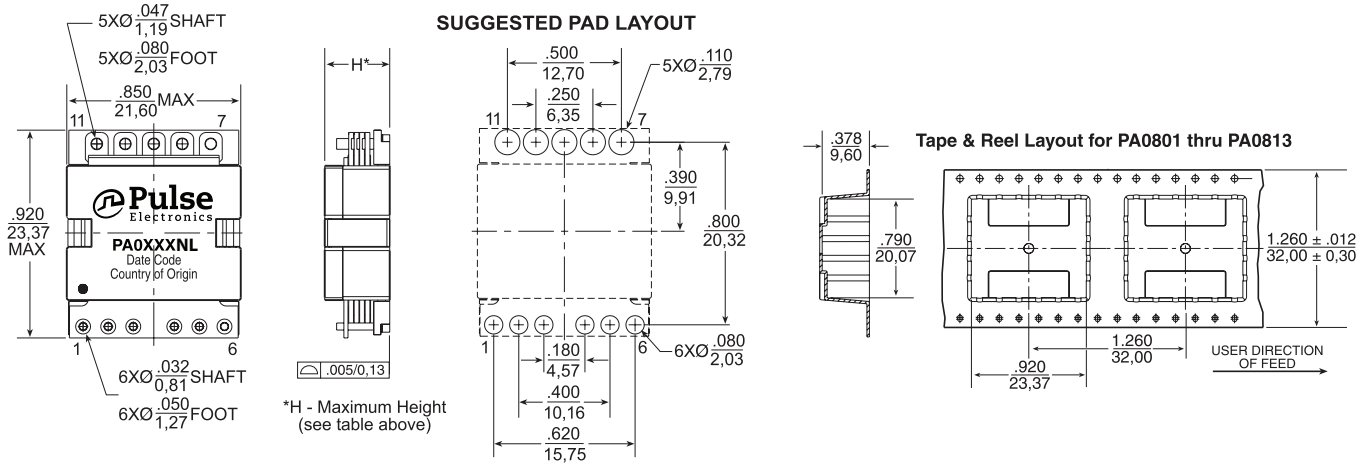

Weight 11.0grams
Tape & Reel 180/reel
Tray 40/tray
Dimensions: Inches / mm
Unless otherwise specified, all tolerances are: ±.010 / 0,25

NOTE: The above is a universal footprint for a component that has all 11 pins populated. For a given number, it is only necessary to provide pads for the termination shown in the schematics on the next page.

Schematics

PA0XXXNL

A1

PA0801NL / 02NL / 03NL / 04NL / 05NL

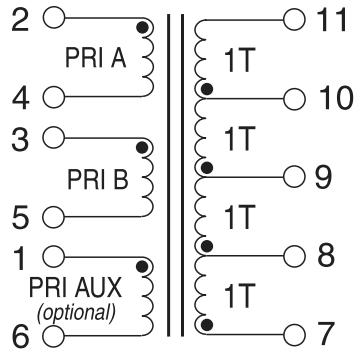

A2

PA0806NL / 07NL / 08NL / 09NL / 10NL

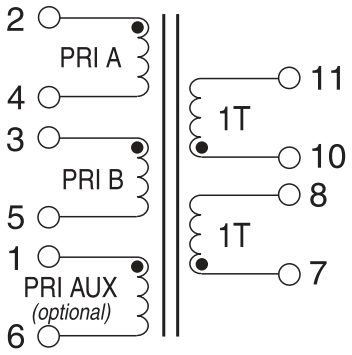

A3

PA0811NL / 12NL / 13NL / 14NL / 15NL

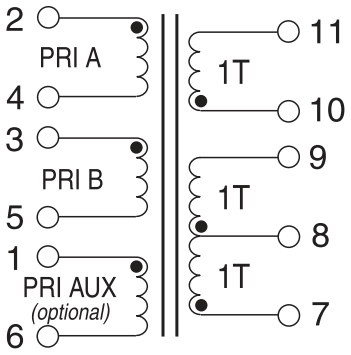

Notes:

1. The above transformers have been tested and approved by Pulse's IC partners and are cited in the appropriate datasheet or evaluation board documentation at these companies. To determine which IC and IC companies are matched with the above transformers, please refer to the IC cross reference on the Pulse web page. See the Spy glass transformer matrix on the next page for other winding configurations that can be made available.
2. To determine if the transformer is suitable for your application, it is necessary to ensure that the temperature rise of the component (ambient plus temperature rise) does not exceed its operating temperature. To determine the approximate temperature rise of the transformer, refer to the graphs below.

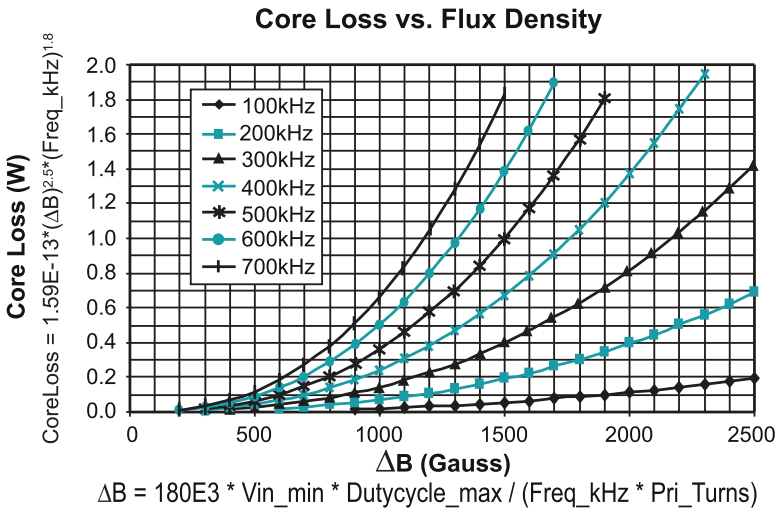

ΔB = 180E3 * Vin_min * Dutycycle_max / (Freq_kHz * Pri_Turns)

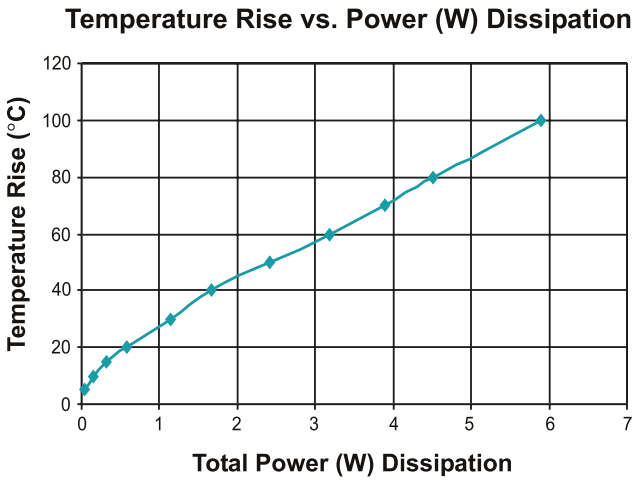

PA08XX Transformer Winding Configuration Matrix

The following is a matrix of the winding configurations that are possible with the Pulse PA08XX Planar Transformer Platform. The package is typically capable of handling between 80-140W of power depending on the application, ambient conditions and available cooling. Once a configuration is selected, the formulae and charts can be used to determine the approximate power dissipation and temperature rise of the component in a given application.

High Frequency Planar Transforms

PA08XXNL Series (up to 140W)

				SECONDARY WINDINGS									
				Single Winding				Tapped Winding				Dual Winding	
		Turns		1T	2T	3T	4T	1:1	1:2	1:3	2:2	1T & 1T	1T & 2T
			DCR (mΩ)	0.44	1.3	3.5	7	1.3	3.5	7	7	1.3	3.5
PRIMARY WINDINGS	Single Winding	4T	10	PA0806	PA0806	PA0811	PA0801	PA0806	PA0811	PA0801	PA0801	PA0806	PA0811
		5T	12.5	PA0808	PA0808	PA0813	PA0803	PA0808	PA0813	PA0803	PA0803	PA0808	PA0813
		6T	15	PA0810	PA0810	PA0815	PA0805	PA0810	PA0815	PA0805	PA0805	PA0810	PA0815
		8T	40	PA0806	PA0806	PA0811	PA0801	PA0806	PA0811	PA0801	PA0801	PA0806	PA0811
		9T	45	PA0807	PA0807	PA0812	PA0802	PA0807	PA0812	PA0802	PA0802	PA0807	PA0812
		10T	50	PA0808	PA0808	PA0813	PA0803	PA0808	PA0813	PA0803	PA0803	PA0808	PA0813
		11T	55	PA0809	PA0809	PA0814	PA0804	PA0809	PA0814	PA0804	PA0804	PA0809	PA0814
		12T	60	PA0810	PA0810	PA0815	PA0805	PA0810	PA0815	PA0805	PA0805	PA0810	PA0815
	Dual Winding	4T/4T	20/20	PA0806	PA0806	PA0811	PA0801	PA0806	PA0811	PA0801	PA0801	PA0806	PA0811
		4T/5T	20/25	PA0807	PA0807	PA0812	PA0802	PA0807	PA0812	PA0802	PA0802	PA0807	PA0812
		5T/5T	25/25	PA0808	PA0808	PA0813	PA0803	PA0808	PA0813	PA0803	PA0803	PA0808	PA0813
		5T/6T	25/30	PA0809	PA0809	PA0814	PA0804	PA0809	PA0814	PA0804	PA0804	PA0809	PA0814
		6T/6T	30/30	PA0810	PA0810	PA0815	PA0805	PA0810	PA0815	PA0805	PA0805	PA0810	PA0815

Notes:

1. The primary inductance for any configuration can be calculated as:
   Primary Inductance (µH MIN) = 2.4 * (Primary_Turns)^2
2. The above base part numbers (**PA08XXNL**) are available from stock.
3. It is possible to add a small gap to the transformer. Gapped transformers are non-standard and can be made available upon request, but are not typically available from stock. To request a gapped version of the transformer, add a suffix "G" to the base number (i.e. PA0801**G**NL or PA0801.004**G**NL etc.). The nominal inductance with the a gap can be calculated as:
   Primary Inductance (µH nominal) = 0.69 * (Primary Turns)^2
4. It is possible to add a primary side aux. winding to any of the above configurations as shown in the schematics. Transformers with primary size aux. windings are non-standard and can be made available upon request, but are not typically available from stock. The primary aux. winding can be between 2 and 16 turns. To add a primary aux. winding to a given base, use the extension **.0XX**. For example, to add a 4T aux. winding to the base part number PA0801NL, use the part number **PA0801.004NL**. To add a 16T aux. winding, use the part number **PA0801.016NL**. With the exception of base parts PA0801/2/6/7/8, the addition of the aux winding increases the height to 9.6mm max. For example, PH0803NL height is 8.6mm MAX, PH0803.005NL height is 9.6mm MAX.
5. Optional Tape & Reel packaging can be ordered by adding a "**T**" suffix to the complete part number (i.e. PA0801 becomes PA0801**T** for no AUX - PA0801.009NL becomes PA0801T.009NL**T** for 9T AUX). PUlse complies to industry standard tape and reel specification EIA481.

For More Information:

Americas - prodinfo_power_americas@yageo.com | **Europe -** prodinfo_power_emea@yageo.com | **Asia -** prodinfo_power_asia@yageo.com

Performance warranty of products offered on this data sheet is limited to the parameters specified. Data is subject to change without notice. Other brand and product names mentioned herein may be trademarks or registered trademarks of their respective owners. © Copyright, 2023. Pulse Electronics, Inc. All rights reserved.

YAGEO Corporation and its affiliates do not recommend the use of commercial or automotive grade products for high reliability applications or manned space flight.