10BASE-T INTERFACE MODULES

Designed for Use with Most 10Base-T Transceiver Chips

Pulse
A TECHNITROL COMPANY



- Improved EMI performance for FCC & CISPR Class B certification
- Designed to meet or exceed IEEE 802.3i-1993 10Base-T specifications
- 235°C peak infrared reflow temperature rating

Electrical Specifications @ 25°C — Operating Temperature 0°C to 70°C

Part Number	Insertion Loss (dB MAX)	Attenuation (dB MIN)[1]			Return Loss 0.1 to 10 MHz (dB MIN)		Crosstalk (dB MIN)					Pri-Sec Isolation
	to 10 MHz	30 MHz TX	30 MHz RX	70 MHz	100 Ω	98±13 Ω	5 MHz	10 MHz	30 MHz	50 MHz	100 MHz	Vrms MIN
PE-68011	-1.0	-32	-15	-25	-18	-15	-50	-45	-35	-30	-35	2000

[1]Both transmit and receive channels meet IEEE 802.3i-1993 specifications, transmit side is further enhanced for the typical applications

Common Mode Rejection

	5 MHz		10 MHz		50 MHz		100 MHz		200 MHz	
	TX	RX	TX	RX	TX	RX	TX	RX	TX	RX
Typical dB	-65	-70	-60	-60	-50	-55	-45	-50	-40	-45
MIN dB	-50	-50	-45	-45	-30	-30	-25	-25	-20	-20

Mechanical

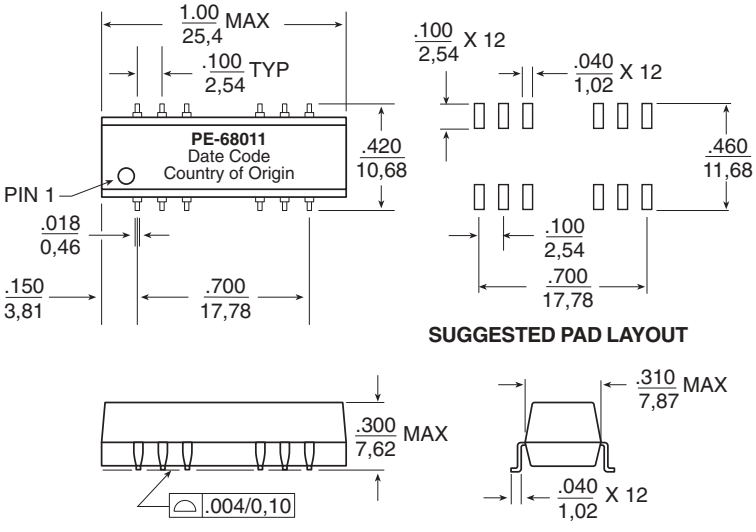

Dimensions: Inches / mm

Unless otherwise specified all tolerances are ±.010 / 0,25

Schematic

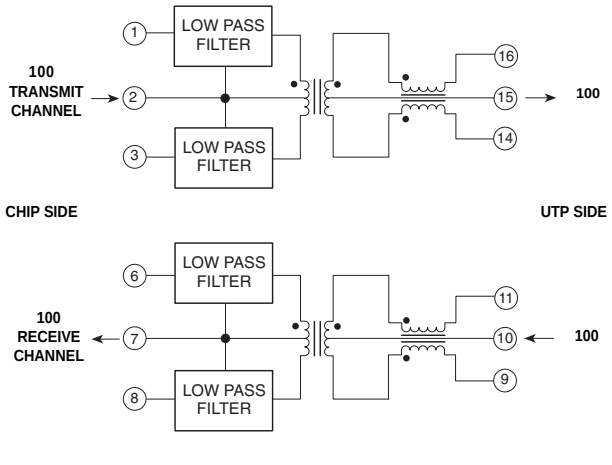

Weight . . . . . .2.8 grams
Tape & Reel 450/reel
Tube 20/tube

10BASE-T INTERFACE MODULES

Designed for Use with Most 10Base-T Transceiver Chips

Application Notes

Pulse's 10Base-T interface module provides the complete analog solution for maintaining high data integrity in transmissions between multiport hubs, and individual stations, (ports, nodes). Hubs and stations utilizing these modules fully meet the requirement of IEEE 802.3i-1993 standards and operate at a full 10 Mbps data rate over 100 meters of cable.

Both transmit and receive channels of PE-68011 consist of low pass filters, isolation transformers and common mode chokes. They provide three basic functions: EMI suppression, impedance matching and equipment isolation.

Compliance with IEEE standards can be achieved by applying rigorous design guidelines to suppress EMI and crosstalk interferences as well as control both signal jitter and reflections.

PE-68011 controls these features by creating the optimum signal shape and spectral content. At system level, these noise mechanisms may be reduced by optimizing high frequency signal paths and utilizing good PCB grounding techniques. PE-68011, with higher order low pass filters and high impedance common mode chokes, significantly helps to minimize noise to the lowest possible level. Each part is fully tested to provide 2000 Vrms breakdown protection from static charge which may develop on the twisted pair line.

Modules are shipped in tubes unless tape & reel is specified. Please add the suffix "T" (i.e. PE-68011**T**) for tape & reel orders (increments of 450 pcs required).

Typical Application Circuit

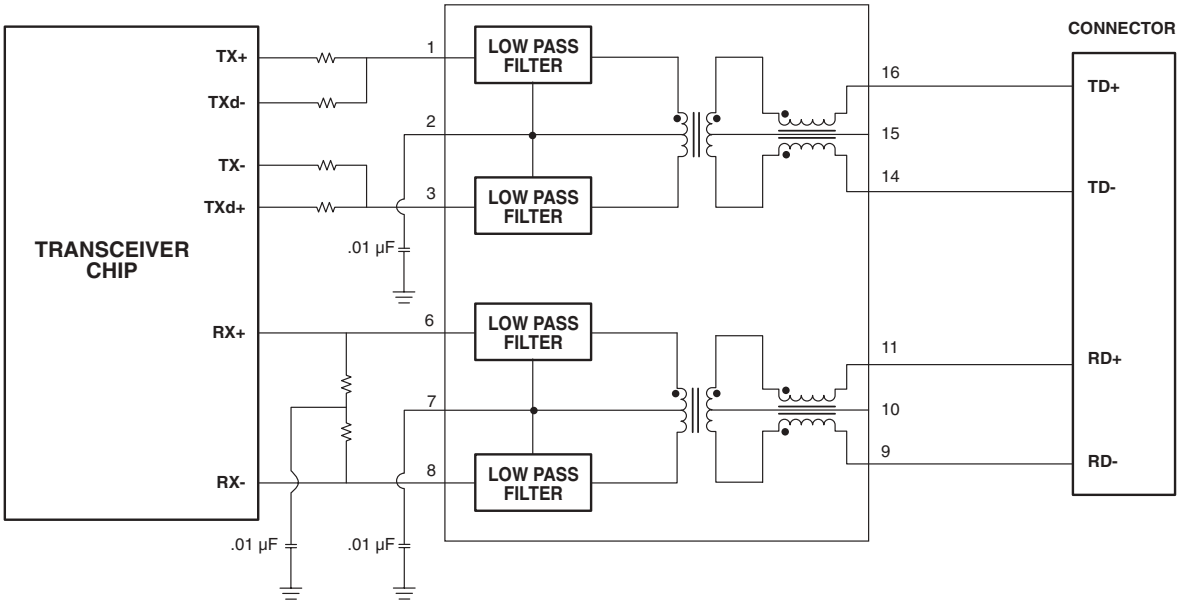

For More Information :

UNITED STATES (Worldwide)
12220 World Trade Drive
San Diego, CA 92128
U.S.A.
http://www.pulseeng.com
TEL: 858 674 8100
FAX: 858 674 8262

UNITED KINGDOM (Northern Europe)
1 & 2 Huxley Road
The Surrey Research Park
Guildford, Surrey GU2 5RE
United Kingdom
TEL: 44 1483 401700
FAX: 44 1483 401701

FRANCE (Southern Europe)
Zone Industrielle
F-39270
Orgelet
France
TEL: 33 3 84 35 04 04
FAX: 33 3 84 25 46 41

SINGAPORE (Southern Asia)
150 Kampong Ampat
#07-01/02
KA Centre
Singapore 368324
TEL: 65 287 8998
FAX: 65 280 0080

TAIWAN, R.O.C. (Northern Asia)
3F-4, No. 81, Sec. 1
HsinTai Wu Road
Hsi-Chih, Taipei Hsien
Taiwan, R.O.C.
Tel: 886 2 2698 0228
FAX: 886 2 2698 0948

HONG KONG (Great China)
19/F, China United Plaza
1008 Tai Nan West Street
Cheung Sha Wan, Kowloon
Hong Kong, China
TEL: 852 2788 6588
FAX: 852 2776 1055

DISTRIBUTOR

Performance warranty of products offered on this data sheet is limited to the parameters specified. Data is subject to change without notice. Other brand and product names mentioned herein may be trademarks or registered trademarks of their respective owners.

Printed on recycled paper. ©2002, Pulse Engineering, Inc.