500 kHz Common Mode EMI Inductors

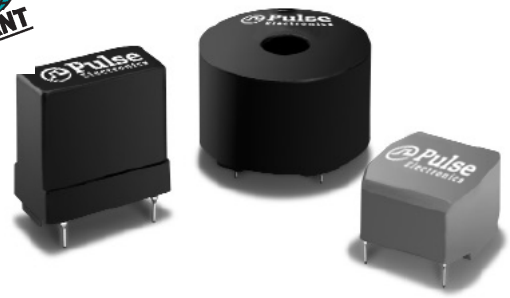

- *Common mode EMI Inductors*
- *Designed for higher frequency power conversion*
- *For use in SMPS input filtering circuit*

Electrical Specifications @ 25°C – Operating Temperature -40°C to +125°C					
Part Number	**Rated RMS Current** (A. Normal)	**Inductance mH** (±30%)	**DCR** (Ω MAX)	**Case Style**	**Leakage Inductance** (MIN/MAX µH)
PE-96161NL	0.5	33	1.40	3	160/320
PE-96166NL	1.0	5.6	0.30	3	30/60
PE-96173NL	3.15	5.6	0.10	1	40/80
PE-96175NL	3.15	3.3	0.07	3	15/35
PE-96177NL	3.15	2.2	0.06	3	10/20
PE-96178NL	3.15	1.2	0.04	3	6/15
PE-96179NL	3.15	1.2	0.04	4	5/14
PE-96181NL	5.0	3.9	0.06	1	25/60
PE-96186NL	6.3	2.7	0.04	1	20/45
PE-96187NL	8.0	3.3	0.033	2	20/45
PE-96188NL	10.0	1.8	0.02	2	10/25
PE-96190NL	15.0	1.0	0.01	2	7/15

Notes:

1. Leads have $\frac{.031/.039}{.700/.900}$ diameter.

2. Self-leaded: **96187** has .036 nom. diameter leads.
   96188 & **96189** have .045 nom. diameter leads.
   96190 has .051 nom. diameter leads.

Mechanicals

CASE 1[1]

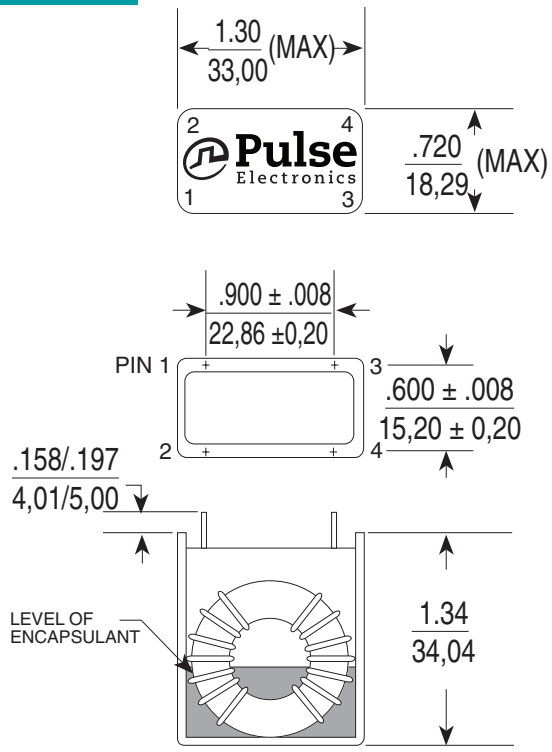

CASE 2[2]

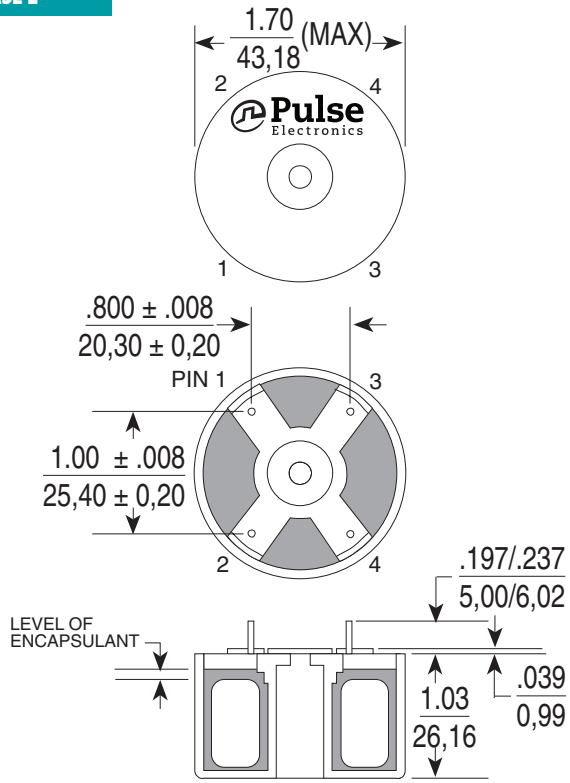

CASE 3[1]

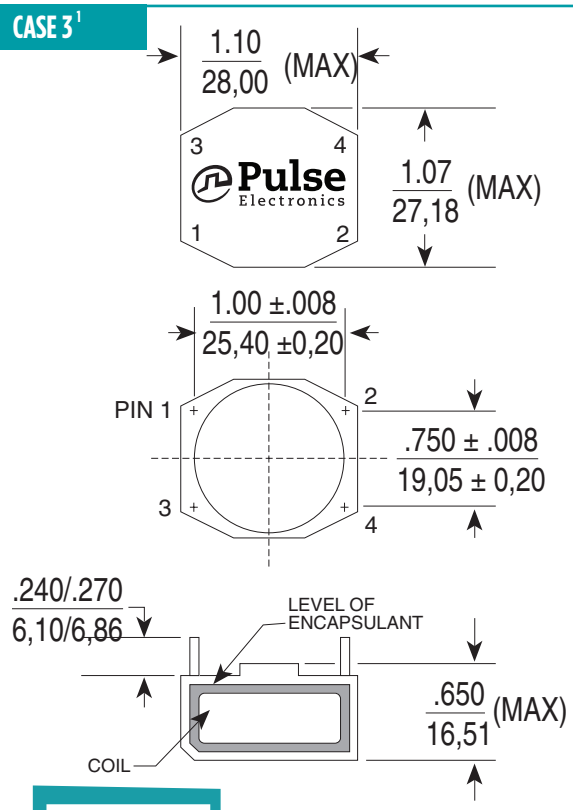

CASE 4[1]

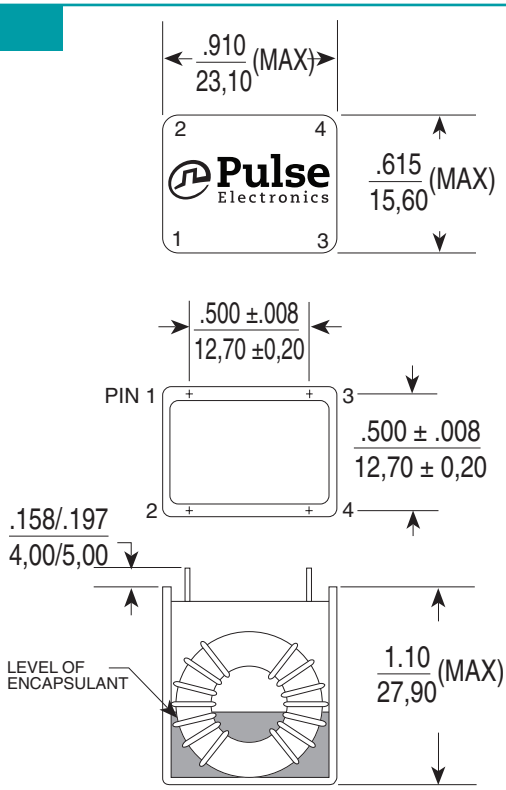

500 kHz Common Mode EMI Inductors

Schematic

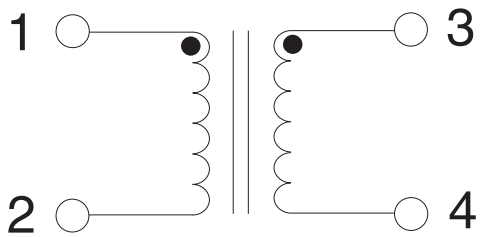

For More Information

Pulse Worldwide Headquarters
12220 World Trade Drive
San Diego, CA 92128
U.S.A.

Tel: 858 674 8100
Fax: 858 674 8262

Pulse Europe
Einsteinstrasse 1
D-71083 Herrenberg
Germany

Tel: 49 7032 7806 0
Fax: 49 7032 7806 135

Pulse China Headquarters
B402, Shenzhen Academy of Aerospace Technology Bldg.
10th Kejinan Road
High-Tech Zone
Nanshan District
Shenzhen, PR China 518057
Tel: 86 755 33966678
Fax: 86 755 33966700

Pulse North China
Room 2704/2705
Super Ocean Finance Ctr.
2067 Yan An Road West
Shanghai 200336
China

Tel: 86 21 62787060
Fax: 86 2162786973

Pulse South Asia
135 Joo Seng Road
#03-02
PM Industrial Bldg.
Singapore 368363

Tel: 65 6287 8998
Fax: 65 6287 8998

Pulse North Asia
3F, No. 198
Zhongyuan Road
Zhongli City
Taoyuan County 320
Taiwan R. O. C.
Tel: 886 3 4356768
Fax: 886 3 4356823 (Pulse)
Fax: 886 3 4356820 (FRE)

Performance warranty of products offered on this data sheet is limited to the parameters specified. Data is subject to change without notice. Other brand and product names mentioned herein may be trademarks or registered trademarks of their respective owners. © Copyright, 2015. Pulse Electronics, Inc. All rights reserved.