Isolation Power Transformers

Sidecar platform SMD - PGG6457.xxxNLT and PMG6457.XXXNLT

Pulse a YAGEO company





- *Push Pull Converter Transformer*
- *Reinforced insulation for isolated power supply driver*
- *13mm creepage and clearance*
- *4.2KVrms isolation (up to 1100 Vpk rated voltage)*[5]
- ***Patented:*** *US Patent 9,646,755*

Electrical Specifications @ 25°C – Operating Temperature -40°C to +125°C

Part Number		Inductance (1-2)	Leakage Inductance (1-2) with (8-7) shorted	Capacitance (1, 2):(8,7)	DCR (1-2)=(3-4)	DCR (6-5)=(8-7)	E*T (1-2)	Turns Ratio	Isolated Voltage
Commercial	Automotive	(µH ±35%)	(µH MAX)	(pF MAX)	(Ω MAX)	(Ω MAX)	(V*µs Max)	(1:4) : (8:5)	(Vrms)
PGG6457.011NL	PMG6457.011NL	72	1.20	10	0.1	0.11	15	1:1	4200
PGG6457.012NL	PMG6457.012NL	72	1.20	10	0.1	0.25	15	1:2	
PGG6457.034NL	PMG6457.034NL	72	1.20	10	0.1	0.15	15	3:4	
PGG6457.057NL	PMG6457.057NL	50	1.00	10	0.1	0.18	15	5:7	
PGG6457.012ANL	PMG6457.012ANL	72	0.30	30	0.1	0.25	15	1:2	

Notes:

1. The ET Max is calculated to limit the core loss and temperature rise at 200KHz based on a bipolar flux swing of 180mT Peak.
2. For Push-Pull topology, where the voltage is applied across half the primary winding turns, the ET needs to be derated by 50% for the same flux swing.
3. The applied ET may need to be further derated for higher frequencies based on the temperature rise which results from the core and copper losses
   A. To calculate total copper loss (W), use the following formula:
   Copper Loss (W) = Irms_Primary^2 * DCR_Primary + Irms_Secondary^2*DCR_Secondary.
   B. To calculate total core loss (W), use the following formula:
   Core Loss (W) = 3.93E-10 * (Frequency in kHz)$^{1.7}$ * (180 * [ET/ET Max])$^{2.17}$
   Where ET is the applied Volt Second, ET Max is the rated Volt Second for 180mT flux swing
   C. To calculate temperature rise, use the following formula:
   Temperature Rise (°C) = 100 * (Core Loss(W) + Copper Loss (W))
4. Creepage and clearance is in accordance with IEC 61558-1 and IEC61558-2-16 for reinforced insulation to a working voltage of 650Vrms (for basic insulation to a working voltage of 1000Vrms) based on material group III, pollution degree 2, OVC II and 5000m altitude.
5. 1100Vpk rated voltage is based on a positive partial discharge test (discharge < 10pC), in accordance with IEC60664 for basic insulation. In an application which requires a reinforced insulation barrier, a rated voltage of 900Vpk, is defined and confirmed by partial discharge testing.

Mechanical

PGG6457.XXXNL

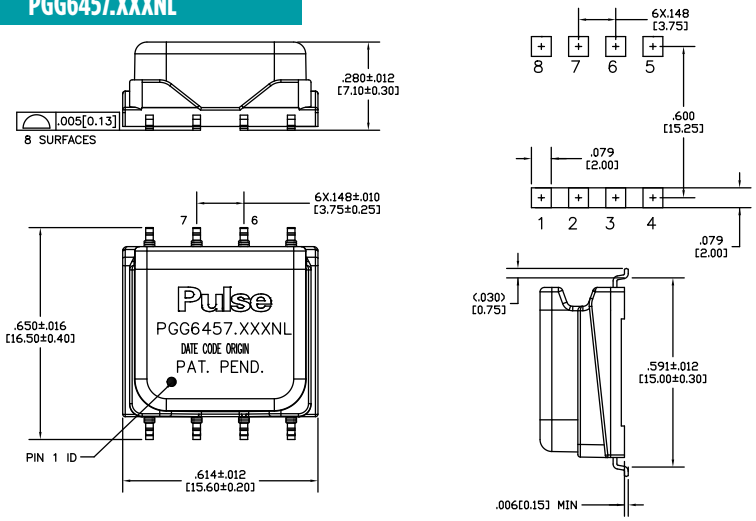

Schematic

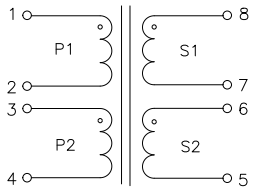

Weight 2.5/grams
Tray 80/tray

Dimensions: Inches / mm

Unless otherwise specified, all tolerances are ± .010 / 0,25

Isolation Power Transformers

Sidecar platform SMD - PGG6457.xxxNLT and PMG6457.xxxNLT

TAPE & REEL INFO

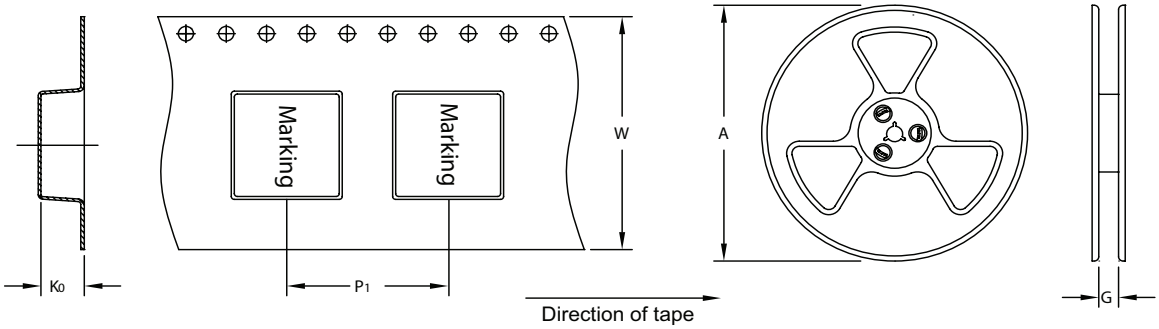

SURFACE MOUNTING TYPE, REEL/TAPE LIST						
PART NUMBER	REEL SIZE (mm)		TAPE SIZE (mm)			QTY
	A	G	P_1	W	K_0	PCS/REEL
PGG6457.XXXNLT	Ø330	32.4	24	32	8.3	300

APPLICATION

PGG6457.XXXNL is a series of high isolation power supply transformer drivers. Intended to operate in a fixed duty cycle Push Pull topology, it is a part of a low cost solution for delivering lower power (up to 2.5W) from a low voltage source. A typical implementation would be an isolated RS-485 power supply driver circuit, the design is compatible with the MAXIM™ MAX253 IC. Other IC's include Texas SN6501 UCC2808, Analog ADuM4070, ADuM447x.
A schematic diagram for the Push Pull converter topology is given below.

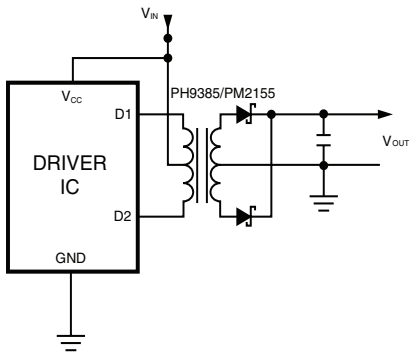

For a fixed 50% duty cycle mode of operation, the output voltage is simply determined by the input voltage and turns ratio. So, with the available turns ratios, a variety of output voltages can be selected. This range can be extended by implementing different topologies such as forward or bridge and can be used with controllers offered by different IC vendors for a number of different applications.

For More Information:

Americas - prodinfo_power_americas@yageo.com | **Europe -** prodinfo_power_emea@yageo.com | **Asia -** prodinfo_power_asia@yageo.com

Performance warranty of products offered on this data sheet is limited to the parameters specified. Data is subject to change without notice. Other brand and product names mentioned herein may be trademarks or registered trademarks of their respective owners. © Copyright, 2023. Pulse Electronics, Inc. All rights reserved.

YAGEO Corporation and its affiliates do not recommend the use of commercial or automotive grade products for high reliability applications or manned space flight.