MOD	Description
P2	Change the Logo

Please follow Pulse Limits for the hazardous substances (RoHS, halogens) in the document "Pulse Hazardous Substances (HS) Limits (RPGE002-03)" and "Vendor Survey Questionnaire, Material Composition (LOM-SAF-L0040)".

Reliability Test Spec accorinding to WIHS7.5.33 (Reliability Test Working Instruction) Default test standard is Test Standard A if no definition

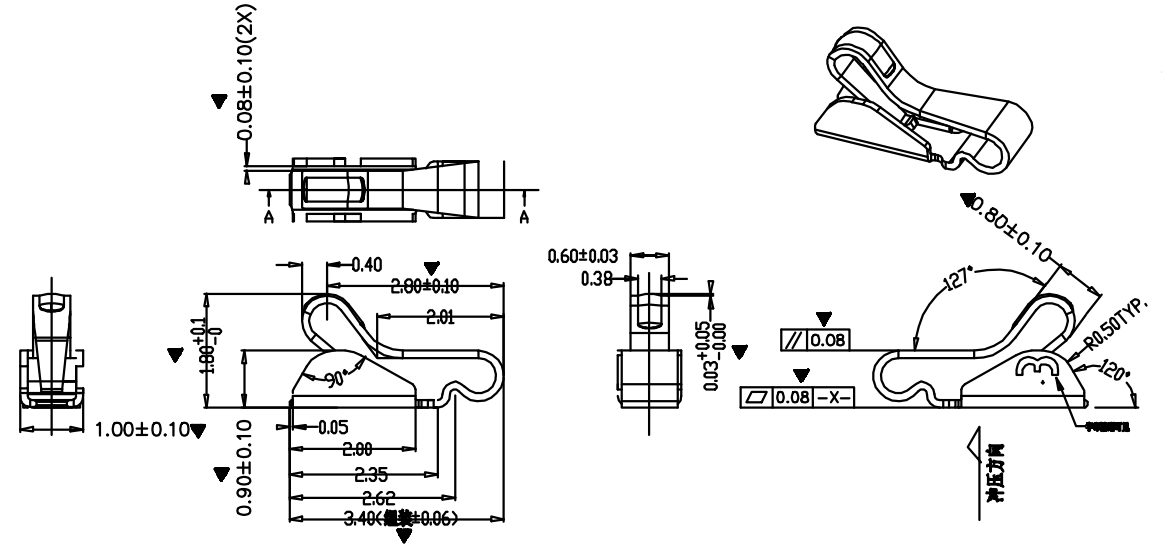

备注:

1.材质: HKT322-EH 0.12*15.00mm(T*W);
2.接触阻抗: 50MΩ MAX;
3.圆面未标注的R角/尖角按照R0.20mm管控;
4.端子毛刺不超过0.03mm;
5.标注▼为重点检验尺寸,CPK为CPK尺寸,首批批量交货需做MiniCPK,CPK值≥1.33,每次交货需附尺寸检验报告
6.机械性能: 端子触点以20mm每分钟速度下压0.40mm ,正向力0.60N MIN.; 下压0.60mm ,正向力1.10~2.00N; 端子下压0.65mm,耐久1000次,力量衰减不超过10%(量产品不超过20%)。
7.端子电镀规格: 接触区域镀金10u" MIN.
焊接区域镀金3 u" MIN.
底材整体镀Ni 50u" MIN.
8.环境要求: 盐雾测试要求:接触区域满足24H,其它区域8H(无氧化、脱皮、生锈,20X前显微镜观察)
电镀后抽锡面积要达到95%以上,将产品焊接在PCB板上,
用推拉力计侧推及从尾部平推将其推掉,其推力都≥3.0Kgf/pin;
焊板R后,产品无变色、起泡、脱皮等不良现象.
9.包装: T&R包装
10.其它: 产品符合HSF标准
11.冲制-电镀-烘烤-包装-(SMT).
12.冲压模号: MJ-287,弹片印"3"字以示区分.

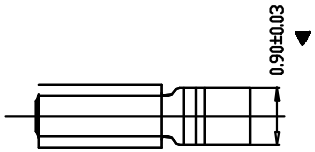

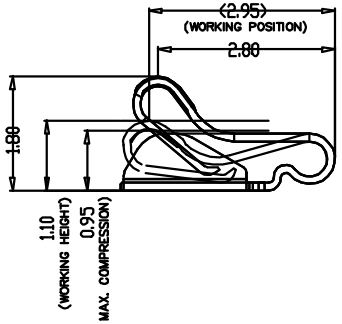

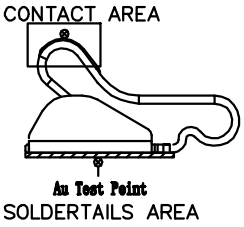

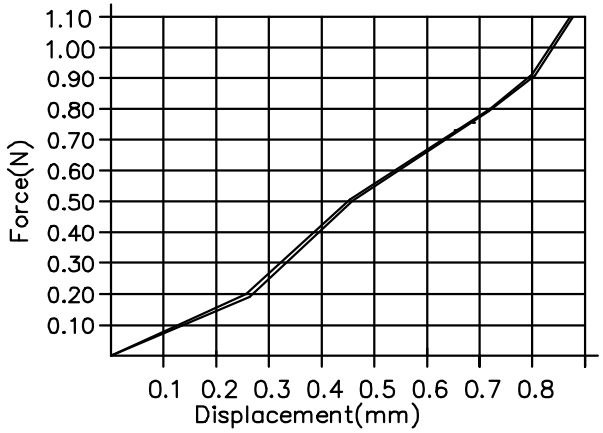

Confidential
This is a proprietary information of Pulse Suzhou.
No reporduction/copying is allowed without permission.

Functional Characteristics Key :(Cpk requirement : Cpk))
- Process Capability Studies required(total pcs)
- Ongoing Statistical Process Control Required (total pcs)
- Critical dimension need to be measured, no CPK requirement (total pcs)

.X± 0.15	
.XX± 0.10	
.XXX±0.05	
X.°± 5°	

PULSE (SUZHOU) WIRELESS PRODUCTS CO.LTD.
Pulse A YAGEO Company
99 HUOJU RD. SUZHOU
NEW DISTRICT
215009
P.R.CHINA

PRODUCT(S)
SW0178N

ITEM
TX16056-001(CLIP)

THIRD ANGLE PROJECTION

SHEET NUMBER		1 / 1	
GENERAL TOLERANCE			
CUSTOMER NUMBER			
DESIGN	JACKIE	JUN-28-18	
CHECKED	MARK	Nov-22-17	
APPROVED	JAMES	Nov-22-17	

SCALE 4.000

DOCUMENT NUMBER	PART VERSION	DOCUMENT VERSION
SW0178N	P01	P2

MOD	DATE	NAME
P2	March-07-19	CHRIS
P1	JUN-28-18	JACKIE