MOD	Description		
P3	Change the Logo	Please follow Pulse Limits for the hazardous substances (RoHS, halogens) in the document "Pulse Hazardous Substances (HS) Limits (RPGE002-03)" and "Vendor Survey Questionnaire, Material Composition (LOM-SAF-L0040)".	Reliability Test Spec accorinding to WIHS7.5.33 (Reliability Test Working Instruction) Default test standard is Test Standard A if no definition

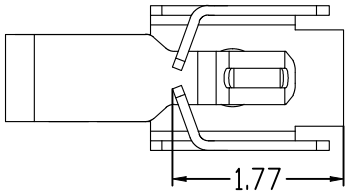

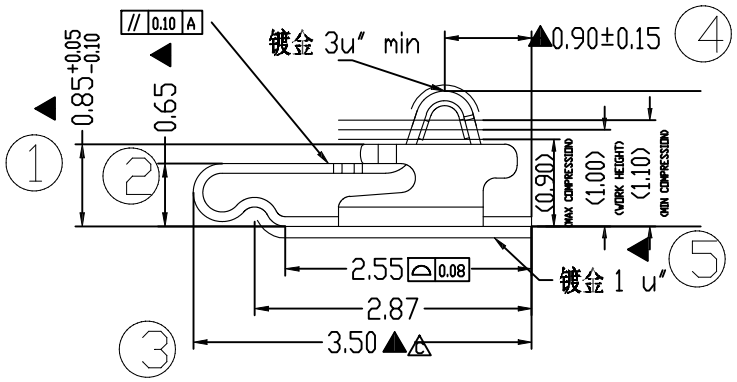

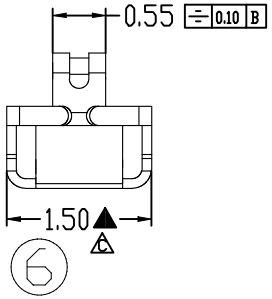

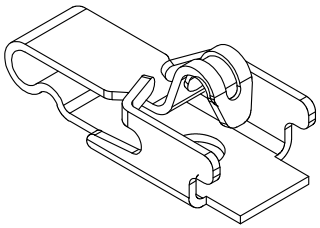

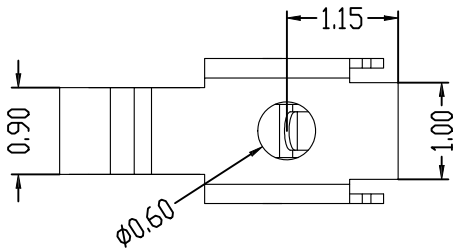

NOTES:UNLESS OTHERWISE SPECIFIED

1. MATERIAL: SUS304-H
2. NO CRACK APPEARS ON CONTACT BALL SHAPE.
3. NO LINES APPEARS ON BENDING AREA.
4. ALL UNSPECIFIED RADII TO BE 0.05 MAXIMUM .
5. BURR:0.03MAX;CUMBER:1.5MM MAX/500MM; TWIST:20°/500MM.
6. PRE-LOAD FORCE:0.40N ON CONTACT POINT
7. PLATING: 3u"MIN GOLD PLATING ON CONTACT AREA,
   GOLD FLASH PLATING ON SOLDER AREA,
   50u" MIN NICKEL PLATING OVER ALL

Confidential
This is a proprietary information of Pulse Suzhou.
No reporduction/copying is allowed without permission.

Functional Characteristics Key (Cpk requirement : Cpk))
◊ Process Capability Studies required(total pcs)
♦ Ongoing Statistical Process Control Required (total pcs)
– Critical dimension need to be measured, no CPK requirement (total pcs)

.X± 0.15	
.XX± 0.10	
.XXX±0.05	
X.°± 5°	

PULSE (SUZHOU) WIRELESS PRODUCTS CO.LTD.
Pulse A YAGEO Company
99 HUOJU RD. SUZHOU NEW DISTRICT 215009 P.R.CHINA

PRODUCT(S) SW0180N

ITEM TX80101-001(CLIP)

THIRD ANGLE PROJECTION

SHEET NUMBER		1 / 1				
GENERAL TOLERANCE						
CUSTOMER NUMBER						
SCALE 4.000	DESIGN	JACKIE	JUN-28-18			
	CHECKED	MARK	Nov-22-17			
	APPROVED	JAMES	Nov-22-17	P3	March-07-19	CHRIS
DOCUMENT NUMBER SW0180N	PART VERSION P01	DOCUMENT VERSION P3		P2	Oct-26-18	Chris
				P1	JUN-28-18	JACKIE
				MOD	DATE	NAME